City of New Britain

STANDARD SPECIFICATIONS FOR MUNICIPAL CONSTRUCTION

PREPARED & ISSUED

BY

DEPARTMENT OF PUBLIC WORKS
ENGINEERING DIVISION

Mark E. Moriarty, P.E - Director

May 2008

NEW BRITAIN PUBLIC WORKS
27 WEST MAIN STREET
NEW BRITAIN, CT 06051

PHONE: 860-826-3350

FAX: 860-826-3353

City of New Britain

DEPARTMENT OF PUBLIC WORKS

"New Britain: A City for All People"

27 West Main Street, New Britain, CT 06051 (860) 826-3350

Director's Message:

The City's Public Works Department is dedicated to helping ensure that all construction within the City is performed to high engineering standards and provides safe and practical solutions for the people that live, work, and play in the City of New Britain.

The Standard Specification for Municipal Construction contained here-in were developed to help achieve these objectives, and also to provide consistency for construction performed within the City limits. The requirements of these standards shall be adhered to on all public and private construction projects.

We appreciate your doing business in the City of New Britain, and encourage you to contact us if you have any questions regarding these standards.

Mark E. Moriarty, P.E.
Director of Public Works

CITY OF NEW BRITAIN
STANDARD SPECIFICATIONS FOR MUNICIPAL CONSTRUCTION

TABLE OF CONTENTS

SECTION 1 – STANDARD SPECIFICATIONS

Reference Specifications and Standards

Part 1: General Construction Work

1.01 Mobilization
1.02 Maintenance & Protection of Traffic
1.03 Trafficperson
1.04 Sweeping for Dust Control
1.05 Calcium Chloride for Dust Control
1.06 Water for Dust Control
1.07 Water Pollution Control (Soil Erosion)
1.08 Sedimentation Control System
1.09 Construction Staking
1.10 Restoration
1.11 Project Sign

Part 2: Earthwork

2.01 Clearing & Grubbing
2.02 General Excavation & Embankment
2.03 Trench Excavation and Backfill
2.04 Rock in Trench Excavation and Backfill
2.05 Test Pits
2.06 Ditch Excavation
2.07 Borrow / Selected Borrow
2.08 Formation of Subgrade
2.09 Subbase
2.10 Processed Aggregate Base
2.11 Processed Stone
2.12 Granular Fill
2.13 Bedding Material

2.14 Temporary Sheeting

Part 3: Sanitary Sewers and Storm Drainage

3.01 Manholes

3.02 Catch Basins

3.03 Storm and Sanitary Sewers

3.04 Storm and Sanitary Sewers Laterals, Chimneys and Clean-outs

3.05 Underdrains and Edgedrains

3.06 Sewage Flow Bypass Pumping

3.07 Pipeline Cleaning And Video Inspection

3.08 Sewer Flow Control

3.09 Sewer Line Pressure Testing and Sealing

3.10 Sewer Line Chemical Root Control

3.11 Abandoning Sewer Or Utility Structures

3.12 Abandoning Pipe and Conduits

3.13 Clean Existing Drainage Systems

Part 4: Concrete and Masonry

4.01 Portland Cement Concrete

4.02 Reinforcing Steel

4.03 Concrete Sidewalk, Curbing, Driveway and Pedestrian Ramps

4.04 Granite Curbing

4.05 Removal of Existing Masonry

Part 5: Roadway

5.01 Bituminous Concrete

5.02 Standard Bituminous Pavement Repairs

5.03 Longitudinal Bituminous Pavement Repairs

5.04 Bituminous Concrete Curbing

5.05 Bituminous Concrete Sidewalk and Driveway

5.06 Milling

5.07 Infrared Pavement Restoration

5.08 Pavement Markings, Symbols and Legend

Part 6: Landscaping

6.01 Topsoil

6.02 Landscape Planting

6.03 Turf Establishment

6.04 Sodding

Part 7: Miscellaneous Work

7.01 Survey Monument, and Monument Discs

7.02 Iron Pin Replacement

SECTION 2 - ENGINEERING STANDARDS

SECTION 3 - REQUIREMENTS FOR AS-BUILT MAPS

SECTION 4 - STANDARD DETAILS

Part 1: General Street Details

1-1 Typical Cross Section

1-2 Section Showing Utility Locations

Part 2: Sanitary and Storm Sewer Details

2-1 Storm and Sanitary Sewer Trench Excavation and Backfill - Flexible Pipe

2-2 Storm and Sanitary Sewer Trench Excavation and Backfill – Rigid Pipe

2-3 Underdrain and Edgedrain

2-4 Catch Basin

2-5 Double Catch Basin Type I

2-6 Double Catch Basin Type II

2-7 Typical Catch Basin Depressed Gutter

2-8 Yard Drain

2-9 Catch Basin Trap

2-10 Offset Catch Basin Type “A”

2-11 Type I Manhole

2-12 Modified Type I Outside Drop Manhole

2-13 Type II Manhole

2-14 Modified Type II Inside Drop Manhole

2-15 Type III Manhole

2-16 New Britain Standard Manhole Casting

2-17 New Britain Standard Watertight Manhole Casting
2-18 Manhole Invert
2-19 Precast Doghouse Manhole Base
2-20 Pipe Plug
2-21 Concrete Manhole Collar
2-22 Concrete Pipe Collar
2-23 Connection Chimney
2-24 Precast Chimney
2-25 Sewer Lateral
2-26 Sewer Lateral Clean-out

Part 3: Curbing, Driveway Ramps, Sidewalk and Paving Details

3-1 Concrete Curbing
3-2 Concrete Driveway Ramp
3-3 Concrete Sidewalk Typical Sections
3-4 Concrete Sidewalk Jointing and Edging
3-5 Sidewalk Ramp Typical Sections
3-6 Sidewalk Ramp Type 1
3-7 Sidewalk Ramp Type 2
3-8 Sidewalk Ramp Type 3
3-9 Sidewalk Ramp Type 4
3-10 Sidewalk Ramp Type 5
3-11 Sidewalk Ramp Detectable Warning
3-12 Bituminous Concrete Curbing
3-13 Bituminous Driveway Ramp
3-14 Bituminous Concrete Sidewalk
3-15 Granite Curbing
3-16 Typical Pedestrian Ramp with Granite Curbing
3-17 Standard Utility Trench Repair
3-18 Longitudinal Utility Trench Pavement Repair

Part 4: Miscellaneous Details

4-1	Typical Project Sign
4-2	N.B. Standard Concrete Monument
4-3	Monument – Pavement
4-4	Monument – Sidewalk
4-5	Monument Casting - Pavement
4-6	Monument Casting – Sidewalk
4-7	Sedimentation Control Bale Erosion Checks
4-8	Sedimentation Control Fence
4-9	Typical Sedimentation Control Bale Inlet Protection
4-10	Temporary Pump Discharge Basin
4-11	Construction Entrance
4-12	Typical Pavement Markings

ATTACHMENTS:

A)	Standard Pay Items
B)	Notices to Contractors
C)	Site Plan Application Check List

CITY OF NEW BRITAIN
STANDARD SPECIFICATIONS FOR MUNICIPAL CONSTRUCTION

REFERENCE SPECIFICATIONS AND STANDARDS

The following listed publications are hereby included in these "City of New Britain Standard Specifications for Municipal Construction" (NB Standard Specifications) as reference specifications and standards:

- **CTDOT Standard Specifications -** The State of Connecticut Department of Transportation (a.k.a. CTDOT) current version of "Standard Specifications for Roads, Bridges and Incidental Construction, Form 8xx, 20xx" together with all supplements thereto issued by CTDOT. Any reference, whether direct or intended and/or implied, to the "State of Connecticut" therein shall be interpreted as referring to the "City of New Britain" as appropriate and/or applicable. Any reference, whether direct or intended and/or implied, to the "State of Connecticut Department of Transportation" therein shall be interpreted as referring to the "City of New Britain Department of Public Works" as appropriate and/or applicable. Any reference, whether direct or intended and/or implied, to the "State of Connecticut Commissioner of Transportation" therein shall be interpreted as referring to the "City of New Britain Director of Public Works" as appropriate and/or applicable.

- **E&S Guidelines -** The current version of "20xx Connecticut Guidelines for Soil Erosion and Sediment Control", as issued by the Connecticut Council on Soil and Water Conservation in cooperation with the Connecticut Department of Environmental Protection, DEP Bulletin 34, including any and all supplements, addenda, and corrections issued thereto.

- **MUTCD –** Part 6 – "Temporary Traffic Control" of the current edition of the "Manual on Uniform Traffic Control Devices for Streets and Highways – 20xx Edition", as published by the U.S. Department of Transportation Federal Highway Administration, including any and all supplements, addenda, and corrections issued thereto.

Resolution of Conflicting Provisions: All requirements indicated on the plans or in the Standard Specifications, the Supplemental Specifications, Special Provisions or other Contract provisions shall be equally binding on the Contractor, unless there is a conflict between or among any of those requirements. In the case of such a conflict, the order of governance among those requirements, in order of descending authority, shall be as follows:

1) Applicable laws, codes, and governmental regulations.

2) Environmental permits, or, in the case of an environmental permit which has been applied for but not issued, the contents of such application.

3) Additional Instructions and Supplemental Drawings, issued or approved (in writing) by the City Engineer after the start of a project.

4) Project specific Technical Specifications and Special Provisions as issued or approved (in writing) by the City Engineer.

5) Project specific Contract Drawings issued or approved (in writing) by the City Engineer.

6) These "Standard Specifications for Municipal Construction."

CITY OF NEW BRITAIN
STANDARD SPECIFICATIONS FOR MUNICIPAL CONSTRUCTION

SECTION 1

STANDARD SPECIFICATIONS

SECTION 1.01
MOBILIZATION

1.01.01 – Description: This work shall conform to the requirements of Section 9.75, "Mobilization", of the CTDOT Standard Specifications.

Pay Item	Pay Unit
Mobilization	LS

SECTION 1.02
MAINTENANCE AND PROTECTION OF TRAFFIC

1.02.01 – Description: The description for Project Work covered by this specification shall be as set forth in Subsection 9.71.01 of CTDOT Standard Specifications.

1.02.03 – Construction Methods: Construction methods for this Work shall be as set forth in Subsection 9.71.03 of CTDOT Standard Specifications, as supplemented by Part 6 of the MUTCD.

1.02.04 – Method of Measurement: 50% of the lump sum price for this work shall be attributed to the supply, erection and initial installation of the various facilities and 50% shall be attributed to the performance of the remainder of the work. Payment for the supply, erection, and initial installation shall be made on a percentage basis of the total anticipated facilities that have been successfully installed to date. Payment for the remaining 50% shall be calculated by the following formula:

(lump sum amount) * (50%) * (percent of total project completed [up to 100%])

Nothing herein shall be construed to limit or preclude partial payments otherwise provided for by the contract.

1.02.05 – Basis of Payment: Basis of Payment for this work shall conform to Section 9.71.05 of CTDOT Standard Specifications with the following amendments:

Delete the third and fourth sentences, “Maintenance…extra work., and replace with the following:

“Maintenance and Protection of Traffic” also includes the cost of furnishing signs, barricades, drums, cones, delineators, as shown on the contract drawings, but does not include the furnishing and placing of materials such as borrow, gravel, crushed stone, bituminous concrete for patching and pipe.

Pay Item	Pay Unit
Maintenance and Protection of Traffic	LS

SECTION 1.03
TRAFFICPERSON

1.03.01 – Description: The description for Project Work covered by this specification shall be as set forth in Section 9.70 of CTDOT Standard Specifications, except that any references to "State Police Officers" are hereby deleted.

Pay Item	Pay Unit
Trafficperson	EST

SECTION 1.04
SWEEPING FOR DUST CONTROL

1.04.01 – Description: This work shall conform to the requirements of Section 9.39, "Sweeping for Dust Control", of the CTDOT Standard Specifications.

Pay Item	Pay Unit
Sweeping for Dust Control	HR

SECTION 1.05
CALCIUM CHLORIDE FOR DUST CONTROL

1.05.01 – Description: This work shall conform to the requirements of Section 9.42, "Calcium Chloride for Dust Control", of the CTDOT Standard Specifications.

Pay Item	Pay Unit
Calcium Chloride for Dust Control	TON

SECTION 1.06
WATER FOR DUST CONTROL

1.06.01 – Description: This work shall conform to the requirements of Section 9.43, "Water for Dust Control", of the CTDOT Standard Specifications.

Pay Item	Pay Unit
Water for Dust Control	MGAL

SECTION 1.07
WATER POLLUTION CONTROL (SOIL EROSION)

1.07.01 – Description: This work shall conform to the requirements of Section 2.10 "Water Pollution Control (Soil Erosion)", of the CTDOT Standard Specifications.

Pay Item	Pay Unit
Water Pollution Control	EST
Temporary Slope Protection	SY

SECTION 1.08
SEDIMENTATION CONTROL SYSTEM

1.08.01 – Description: This work shall conform to the requirements of Section 2.19 "Sedimentation Control System", of the CTDOT Standard Specifications.

Pay Item	Pay Unit
Sedimentation Control Bales	LF
Sedimentation Control Fence	LF

SECTION 1.09
CONSTRUCTION STAKING

1.09.01 – Description: This work shall conform to the requirements of Section 9.80, "Construction Staking", of the CTDOT Standard Specifications.

Pay Item	Pay Unit
Construction Staking	LS

SECTION 1.10
RESTORATION

1.10.01 – Description: Project Work covered by this specification shall consist of furnishing all labor, materials, equipment, tools, and incidentals necessary for the satisfactory clean-up and restoration, to a condition equal to or better than original, of all areas and facilities disturbed during project construction. This shall include, but not be limited to all topsoil, lawns, bushes, shrubs, trees, fences, walls, painted steel hand rail pipe, all signs which were removed, or any and all other property removed or harmed in any way by work done under this contract. This includes grading cuts and fills of all lawn areas and clean-up along the entire work site of any construction debris, left over materials, stones and other unsightly conditions.

1.10.02 – Materials: Materials for Project Work covered by this specification shall be in accordance with other applicable specifications herein, based on the nature of the subject aspect of the work being performed, or, in absence of the same, in accordance with industry standards for the rehabilitation and/or restoration of the subject facility or area for its intended purpose.

1.10.03 – Construction Methods: Project Work covered by this specification shall be in accordance with other applicable specifications herein, based on the nature of the subject aspect of the work being performed, or, in absence of the same, in accordance with industry standards for the rehabilitation and/or restoration of the subject facility or area for its intended purpose.

Restoration work shall be on-going and diligently performed in a timely manner as the prosecution of Project Work progresses and as work adjacent to disturbed areas and facilities is completed.

1.10.04 – Method of Measurement: The method of measurement for Project Work covered by this specification shall be as determined by the Engineer, and shall be appropriate to the amount of restoration work performed by the Contractor in a given pay period as a percentage of total anticipated restoration work required.

1.10.05 – Basis of Payment: The Project Work covered by this specification shall be paid for at the contract lump sum price set forth in the Bid proposal; which price shall include all labor, materials, equipment, tools, transportation, operations, expenses, fees, and incidentals necessary to complete the subject work.

The total amount of payment for restoration work due the Contractor shall not exceed 70% of the appropriate “Minimum Amount to be Set Aside” [for restoration] set forth in the table below prior to substantial completion of the Project.

Minimum amounts to be set aside for restoration:

Total Contract Amount (TCA)	***Minimum Amount to be Set Aside***
< $200,001	2% of TCA
$200,001 to $1,000,000	Greater of $4,000 or 1% of TCA
$1,000,001 to $5,000,000	Greater of $10,000 or 0.5% of TCA
> $5,000,000	$25,000

The contract lump sum price for this item shall be at least that amount derived from the above "Minimum Amount to be Set Aside" chart.

Note that any bid proposal submitted in which the amount bid for the Item "Restoration" is less than the appropriate "Minimum Amount to be Set Aside" [for restoration] set forth in the above table may be considered unbalanced and/or nonconforming and thereby rejected.

Pay Item	Pay Unit
Restoration	LS

SECTION 1.11
PROJECT SIGN

1.11.01 – Description: Work under this item shall consist of the fabricating, lettering, placing, maintaining, removing and transporting of the project signs in accordance with these specifications at the locations shown on the Contract Drawings or as directed by the Engineer.

1.11.02 – Materials: All materials used for the project signs shall be weatherproof and constructed in accordance with the details, wording and format shown on the Contract Drawings or elsewhere in the Specifications.

1.11.03 – Construction Methods: The signs shall be installed at the locations specified on the Contract Drawings or directed by the Engineer, securely supported at a height above the prevailing grade to permit public viewing and maintained in a neat, clean and legible condition for the duration of the Contract.

Upon completion of the Contract, the Contractor shall remove the project signs and deliver same to the Local Public Agency unless otherwise directed at no additional cost.

1.11.04 - Method Of Measurement: This work will be measured for payment by the actual number of project signs fabricated, lettered, placed and accepted.

1.11.05 - Basis Of Payment: "Project Sign" will be paid for at the contract unit price per each, completed and accepted, which price shall include the fabricating, lettering, placing, maintaining, removing, transporting and all materials, equipment, tools, work and labor necessary for or incidental to the completion of the item.

Pay Item	Pay Unit
Project Sign	EA

SECTION 2.01
CLEARING AND GRUBBING

2.01.01 – Description: This work shall conform to the requirements of Section 2.01, "Clearing and Grubbing", of the CTDOT Standard Specifications, as amended herein.

This work shall also include clearing the ground for projects such as park development or other non-roadway projects, within the limits of work surface improvements, as shown on the contract drawings or as specified elsewhere.

References to highway limits shall be construed to mean limits of work surface improvements.

Pay Item	Pay Unit
Clearing and Grubbing	LS

SECTION 2.02
GENERAL EXCAVATION AND EMBANKMENT

2.02.01 – Description: This work shall conform to the requirements of Section 2.02.01of the CTDOT Standard Specifications, amended as follows.

Add to Classifications:
Unclassified Excavation shall be that excavation which is not classified by type of material or location. It shall include any and all Earth Excavation, Rock Excavation, Pavement Excavation, Pavement Surface Removal, Channel Excavation both rock and earth removed as indicated or as directed.

2.02.03 - Construction Methods: This work shall conform to the requirements of Section 2.02.03 of the CTDOT Standard Specifications, amended as follows.

Add the following to 4. Excavation of Rock:

Where a price for rock excavation has been bid and is applicable, only solid ledge rock, which required blasting, wedging or special tools for removal, and boulders which individually contain more than one cubic yard, will be paid for. Loose disintegrated rock, loose shale, nested stones, hardpan and the like will not be paid for. If there is any question as to whether any material should or should not be classed as rock, all said questions must be referred to the Engineer for determination before the material is disturbed.

Prior to performing any blasting operation, the Contractor shall have a pre-blast survey conducted by a firm having expertise in this field and approved by the Engineer. A written report shall be submitted to the Engineer prior to start of construction in the areas where blasting will be required. The pre-blast survey shall include a complete physical inspection and photographic record of all facilities including, but not limited to wells, buildings, retaining walls and foundations that may be disturbed during the construction process. It will document the interior and exterior conditions of all structures included in the survey.

Add the following to 5. Placement of Embankment:

All inorganic soils excavated from within the limits of excavation shall be considered suitable for the formation of embankments. However, if at the time of excavation these soils are wet and saturated, they shall be dried to a moisture content within 3% of the optimum moisture content as determined by AASHO T-99, Method C, prior to placing and compacting it. In order to attain this moisture content, the Contractor may have to stockpile this excavated material and allow it to dry. No additional compensation will be allowed for hauling such excavated material to and from stockpile areas or for any costs incurred in drying the excavated soil to the required moisture content.

The Contractor may elect to supply and haul-in approved material rather than dry out excavated soils. No payment will be made for such material.

Add the following to 8. Surplus Excavated Material:

Excavated materials when suitable may be used as a substitute for materials to be supplied or furnished by the Contractor for use in other Items of work (such as topsoil, granular fill, etc.) subject to the following:

- Prior approval of the Engineer before its use as a substitute, and
- A suitable credit, approved by the Engineer, has been given to the Owner for the amount substituted.

In no case, however, will any payment be made to the Contractor for other items made necessary by this substitution to replace materials required to complete the embankments or other items of work. The Contractor shall furnish at his own expense an amount of satisfactory material equivalent to that which the excavated material substituted and used in other items of work would occupy.

2.02.04 - METHOD OF MEASUREMENT: This work shall conform to the requirements of Section 2.02.04 of the CTDOT Standard Specifications, with the following addition:

Payment lines for Unclassified Excavation shall coincide with the slope and subgrade lines or the top of payment lines for ditch excavation, whichever applies, as shown on the plans or as directed.

2.02.05 - BASIS OF PAYMENT: This work shall conform to the requirements of Section 2.02.05 of the CTDOT Standard Specifications, with the following additions:

Also included in the item is the cost for per-blast surveys as described or directed.

Add "Unclassified Excavation" to the first sentence after the words …"Rock Excavation (No Explosives),"…

Pay Item	Pay Unit
Rock Excavation (No Explosives)	CY
Earth Excavation	CY
Rock Excavation	CY
Unclassified Excavation	CY
Channel Excavation - Earth	CY
Channel Excavation - Rock	CY
Cut Concrete Pavement	LF
Cut Bituminous Concrete Pavement	LF
Removal of Concrete Pavement	SY
Unsuitable Material Excavation	CY

SECTION 2.03
TRENCH EXCAVATION AND BACKFILL

2.03.01 – Description: This work shall conform to Section 2.05.01 of the CTDOT Standard Specifications, as amended below.

This section shall also include backfilling trenches which are in City streets with granular fill and removal and disposal off-site of existing excavated material, as directed.

2.03.02 – Materials: Unless otherwise specified, all materials for bedding material, granular backfill, processed stone, etc. shall conform to the current NB Standard Specifications.

1. Testing

   A. Unless otherwise agreed to in writing or amended by City of New Britain Contract Special Conditions, a reasonable amount of routine testing shall be ordered on an "as needed" basis by the City Engineer. This testing will be performed at the City's expense. If initial testing results indicate that the specifications have not been met, additional testing will be ordered by the City Engineer. This additional testing shall be at the Contractor's expense and shall be continued until such time as the test results indicate conformance to the specification is being achieved.

   B. At the request of the City Engineer, the Contractor shall be required, at his/her expense, to submit certified test reports in accordance with CTDOT Standard Specifications, Section 1.06.07 for any materials incorporated into the work. Failure or refusal to comply shall be deemed as grounds for immediate removal of subject materials and replacement with materials for which such reports and certificates can be provided, all at the Contractor's expense.

2.03.03 - Construction Methods: This work shall conform to requirements of CTDOT Standard Specifications, Section 2.05.03 including the following additions:

Dewatering

The Contractor shall provide all necessary pumps, dams, drains, ditches, flumes, well points and other means of excluding and removing ground water or any water from any source from trenches and other parts of the work and for preventing the slopes from sliding or caving. He shall sufficiently dewater all trenches to completely dry out and solidify the sub-base below the bottom of the trench to whatever depth is necessary below the bottom of the trench to provide a firm, solid, completely dry trench bottom on which to place foundation material, lay pipe or build a structure. The Contractor shall satisfactorily remove all water which interferes with the work. The flow of all sewers, drains, house connections and watercourses encountered shall be maintained and provided for by the Contractor without damage or nuisance to other parties. All connections shall be restored as ordered. Before any masonry is placed or pipes are laid, suitable drains shall be provided as needed and maintained in order that the bottom may be free from

water and sufficiently dry at all times. No masonry of any kind laid in cement mortar shall be placed in water. No water shall be allowed to flow over or rise up on fresh concrete, and no drainage shall be allowed to enter the pipe until such time and under such conditions as the Engineer shall direct. The Contractor shall provide and operate additional pumps or drains at any place where the Engineer shall deem them necessary. The Contractor shall construct temporary pump discharge basins as shown on NB Standard Details, at locations shown on the plans or directed. When the basin is no longer required, The Contractor shall remove and dispose of all components.

Public Convenience

All construction must be carried on with a minimum of inconvenience and danger to the public and all other parties. To that end, the length of trench opened at any time, from point where ground is being broken to completed backfill and temporary surfacing, and also the amount of space in streets or public or private lands occupied by trench, spoil banks, equipment and supplies, shall not exceed the space or spaces considered reasonably necessary and expedient by the Engineer. In determining the length of open trench, the space for equipment, materials, supplies, etc. needed, the Engineer will consider the nature of the street or land where work is being done, depth and width of trench, types and methods of construction and equipment being used, inconvenience to the public or to private parties, possible dangers, limits of rights-of-way and other proper matters. The Contractor must keep streets and premises near the work free from unnecessary obstructions, debris, etc. The Engineer may, at any time, order all equipment, materials, surplus from excavations, debris, etc. lying outside reasonable limits of space, promptly removed; and, should the Contractor fail to remove such materials within one day after notice to remove the same, the Engineer may cause any part of all of such materials to be removed by such persons as he may employ, at the Contractor's expense and may deduct the costs thereof from payments which may be or may become due to the Contractor under this Contract. In any cases where public safety urgently demands it, the Engineer may cause such materials to be removed without prior notice.

Other Utilities

The Contractor shall be solely responsible for the supporting and protection of all existing gas, water, electric, telephone and sewer mains and services unless they are marked to be C&P (cut and plugged) and are to be abandoned. The support and protection of said existing utilities shall be repaired at the cost of the Contractor whether the repair work is done by the Contractor or utility company. Cost for supporting and protecting shall be included in the unit price bid for these excavation items.

If any sewer, drain, lateral, utility, connection or similar conduit is encountered and cut off, abandoned or cut through incidental to the construction of the work, and, if the said drain, etc. is not to continue to function or to be used, then the open end or ends of such sewer, etc. shall be securely and tightly closed by an adequate cover or bulkheads as directed by the Engineer. The cost of such covers, bulkheads and the setting of them shall have been included in the price or prices bid for various other portions of the work in the proposal and no additional payment will be made therefore.

The Contractor shall be responsible for supporting and protecting the existing utility poles. Support and protection, including repair of such supports and protection, whether it is done by the Contractor or the overhead utility company, shall be repaired at the cost of the Contractor. The cost of supporting and protecting the poles and overhead wires, including maintenance and repair of supports and protection, shall be included in the unit bid for this item, Trench Excavation.

Abandonment of Existing Structures and/or Pipes

If this work is required, it shall conform to the appropriate sections this specification and Sections 3.11 and 3.12.

Backfill and Backfilling

Backfilling in public streets and highways shall be done in accordance with rules, regulations, laws and ordinances of the City of New Britain or the State of Connecticut depending upon which governmental unit is responsible for the maintenance of said streets or highways. It is the responsibility of the Contractor to ascertain and comply with the appropriate requirements.

Where, in the opinion of the Engineer, the soil in the bottom of the trench is unsuitable, additional material meeting the requirements of the NB Standard Specifications and approved by the Engineer, shall be brought in from outside sources to be used as bedding/backfill under pipe.

In all cases when backfilling trenches in City streets, the excavated material SHALL NOT be used as backfill, unless specifically approved in writing by the City Engineer. Suitable granular fill shall be brought in from an approved source to be used as trench backfill. It shall be placed in accordance with Specification 2.14 of the NB Standard Specifications.

After the pipe and joints have been inspected and approved by the Engineer, the material (s) designated to be used for bedding shall be carefully placed and tamped under the pipe to insure a uniform bearing surface to prevent lateral movement of the pipe. Bedding around the pipe shall be hand laid in layers of 6” in thickness on both sides of the pipe and thoroughly and carefully tamped with an approved mechanical tamper until enough fill has been placed to provide a cover of not less than one (1) foot above the top of pipe. Unless otherwise noted in the plans and specifications or specifically authorized by the Engineer in writing, the remainder of the backfill depth may be placed by machine in layers not more than 6” thick after compaction and compacted to a dry density of 95% of the maximum dry density achieved by AASHTO T-180, Method D, for the same material.

Fill material shall not be allowed to fall from any bucket, power shovel, bulldozer, truck or similar equipment through a height of over 5’ until the pipe has been well covered to at least one-quarter the depth of the materials drop, not within 5’ of any vertical wall or any manhole or similar structure. Filling against masonry shall be made by hand, of fine material similar to that specified for filling along sides and over top of the pipe, and at such times as the Engineer may direct. Rubbish, refuse, odd bits of lumber, frozen earth, etc., shall not be buried in the backfill.

Large, solid lumps of earth, large stones, rock or masses of broken masonry shall not be embedded in backfill unless entirely surrounded and separated by well compacted masses of fine materials.

All suitable material removed in making the excavations shall be used for backfilling as required unless otherwise called for on the contract drawings, other sections of this specification or directed by the Engineer. All inorganic soils excavated from within the trench limits shall be considered suitable for trench backfill except: for backfill in City streets unless approved in writing by the City engineer; if such material is to be used for bedding, it must meet such additional requirements as called out in the plans and specifications.

Excavated material deemed suitable for backfill shall not be placed in trenches unless the moisture content is within ± 3% of the optimum moisture content as determined by ASSHTO T-180, Method D. The Contractor is required to take such measures as may be necessary to dry or moisten the material to being it to within ± 3% of optimum moisture prior to placing the material as backfill. No additional compensation will be allowed for any effort involved in drying or hydrating such material. If the Contractor elects to supply and haul approved backfill rather than dry out or hydrate excavated soils, no payment will be made for such backfill or the disposal of the excavated soil.

For all trenches in existing roadways, the 18" of the trench below the pavement shall be backfilled with compacted processed aggregate base. Compaction of the processed aggregate base shall be no less than 95% of the maximum dry density achieved by ASSHTO T-180, Method D, of the same material. The cost of the 18" of processed aggregate base shall be paid for as a separate item unless otherwise specified.

Any backfilled trench which has settled shall be reopened by the Contractor to the depth required for the proper compaction, then refilled and compacted until the surface is restored to the required grade and compaction, all at the Contractor's expense.

Surplus Material

The surplus materials remaining after trenches have been backfilled shall be disposed of, as the Engineer shall approve. Street and sidewalk areas shall be cleaned and left, in all respects, in as good condition as existed before work started unless otherwise noted on the plans.

Manhole frames and covers or catch basin grates and frame removed from existing utilities removed because of the new construction shall be returned by the Contractor to the Public Works Transfer Station on Christian Lane in Berlin, CT.

Trench Maintenance

It is the Contractor's responsibility to maintain the trench for a period of at least twelve (12) months or until such time as the City accepts the completed project, whether the surface is processed gravel, temporary or permanent pavement.

Steel Bridging Plates

Steel Bridging plates shall be used when it is necessary to leave an excavation open and unattended after working hours in heavily traveled roadways. Steel bridging plates shall be satisfactorily shimmed, blocked, pinned and ramped with bituminous concrete to eliminate noise and displacement.

2.03.04 - Method of Measurement: All language on payment limits in CTDOT Standard Specifications, Section 2.05.04 is hereby deleted and the following substituted therefore:

Horizontal and vertical pay limits shall be in accordance with the pay limit details contained in the City Standard Details.

2.03.05 - Basis of Payment: This work will be paid for in accordance with CTDOT Standard Specifications, Section 2.05.05 amended as follows:

There will be no direct payment for cutting and removing existing sidewalks, curbs and pavement and/or bases, or other structures to be abandoned, dewatering, furnishing and removing pump discharge basins, shoring, backfilling, compaction of backfill, timbers and supports, disposal of all surplus materials, steel-bridging plates, but the cost of all such work shall be considered included in the contract unit price for "Trench Excavation (depth)" at the applicable depth unless the particular item appears separately in the Form of Bid. Also included in the unit price for Trench Excavation will be the cost of supporting and bracing utility poles and guys.

If the Engineer has determined that temporary sheet piling is required, the work shall conform to Section 2.14 of these specifications.

In State Highways where the CTDOT requires that a trench be completely backfilled at the end of each working day, no additional payment shall be made for the re-excavation of the trench when work continues at a later date, but the cost of such re-excavation shall be included in the unit price bid for these items.

There will be no additional payment for the trench maintenance as stated in section 2.03.03 above, but the cost shall be included in the item "Trench Excavation (depth)".

If required, Granular Fill will be measured and paid in accordance with Section 2.12 of the NB Standard Specification.

Processed stone shall be measured and paid in accordance with Section 2.11 of the NB Standard Specification.

Pay Item	Pay Unit
Trench Excavation (0-12’ Deep)	CY
Trench Excavation (0- over 12’ Deep)	CY

SECTION 2.04
ROCK IN TRENCH EXCAVATION AND BACKFILL

2.04.01 – Description: This work shall conform to all requirements of Section 2.05 " Trench Excavation" of the CTDOT Standard Specifications that refer/apply to rock in trench excavation, as amended herein.

This section shall also include backfilling trenches which are in City streets with granular fill and removal and disposal off-site of existing excavated material.

2.04.03 - Construction Methods: add the following:

Pre-Blast Survey

Prior to performing any blasting operation, the Contractor shall have a pre-blast survey conducted by a firm having expertise in this field and approved by the Engineer. A written report shall be submitted to the Engineer prior to start of construction in the areas where blasting will be required. The pre-blast survey shall include a complete physical inspection and photographic record of all facilities including, but not limited to wells, buildings, retaining walls and foundations that may be disturbed during the construction process. It will document the interior and exterior conditions of all structures included in the survey.

Uncover Rock

Whenever rock is encountered for which payment is to be made, it shall be stripped of the overlying material in sections of size as approved by the Engineer and the Engineer shall be notified to examine the same. Any rock excavated before the Engineer has examined it will not be included in quantities estimated for payment by the Engineer.

Blasting and Explosives:

Explosives for blasting shall be stored, handled, and used in accordance with the laws, ordinances, regulations of the State of Connecticut, all local regulations, and with such additional regulations as the Engineer may require. Blasting shall be conducted so as not to endanger persons or property and, unless otherwise permitted, shall be covered or otherwise satisfactorily confined. The Contractor shall be responsible for and shall make good any damage of whatever nature caused by blasting or accidental explosions.

All permits and licenses shall be obtained by the Contractor at his expense with copies given to the Engineer.

Explosives must be carefully transported, stored, handled and used. The Contractor will keep on the job only such quantities of explosives as may be needed for the work underway and only during such time as they are being used. Explosives shall be stored in a secure manner in locked containers and separately from other explosives. When the need for explosives is ended, all such material remaining on the job shall be promptly removed from the premise. Care must be taken that no explosives, caps or

detonators are stolen or get into the hand of unauthorized persons or left unguarded where they may cause accidents.

An accurate blasting log must be maintained continuously for the duration of the Contract. The log shall record, for each shot the location, amount of holes, depth, spacing, amount of explosives per hole, number of caps used and the exact date and time of the blast. In addition, a sketch showing displacement of direct and delay caps for each shot shall be recorded.

Explosives shall be of such power and placed and used in such quantities and position as will not make the excavation unduly large not shatter unnecessarily the rock upon or against which the pipe or structure is to be built, nor injure adjacent persons or property, those portions of the new work or structure as may already be in place or other adjacent pipes, ducts or other structure. The quantity of explosives fired at one blast must be small enough and the time for blasting selected to avoid undue annoyance to person owning or occupying premises near the work.

The rock must be completely matted when blasts are fired to prevent damage or injury to persons or property or the scattering of broken fragments on the adjacent ground. Adequate warning shall be given all persons in the vicinity before any blast is discharged.

When blasting, the operation shall be conducted with such care as not to cause damage to any of the existing underground or overhead utilities, pavements, building or any other property. The cost of repairs shall be the sole responsibility of the Contractor.

Each shot sequence shall begin only 20’ ahead of completed work to minimize the length of open trench. Completed work must be properly protected prior to each shot.

The provisions herein shall apply where soil formation resembles rock, even if it is of such a nature that it is not classified and paid for as rock excavation, and if so ordered by the Engineer, will apply to openings cuts through masonry, nested boulders or other materials not herein classed as rock.

In areas where the proposed construction is built against the faces of rock excavation, all loosened or shattered portions of the rock must be completely removed by barring, wedging or other approved means so the masonry can be built firmly in contact with solid rock.

Existing Utilities

When parallel and adjacent to or crossing existing gas, water, sanitary, storm, subway or other utilities and structures and all services connected thereto, the Contractor shall remove the rock by methods other than blasting, if necessary, in order to protect said utilities and their services from damage. Approved methods other than blasting are baring and wedging, jack hammer, rock jacks or other such hand or machinery methods which will not damage the adjacent utility.

It shall be the Contractor’s responsibility to contact, in writing, all utility companies and determine from each company how close to the utilities’ structure or pipe the utility will permit the Contractor to conduct blasting operations. The Connecticut Natural Gas Corporation has already stated that they will not permit blasting within 10’ of a gas main which crosses the proposed work or within 6’ of a gas main

which is parallel to the proposed work. However, before beginning any work, the Contractor shall confirm the above distances with the Gas Corporation.

In all cases, and regardless of the method used to remove rock, any damage caused by the removal of rock to existing underground or overhead utilities, pavements, buildings or any other property shall be repaired and the cost of such repairs shall be the sole responsibility of the Contractor. Blasting to remove rock within 10' of any water main shall first be approved by the Engineer.

Insurance

No explosives shall be brought into, stored or used on the site of any job by the Contractor unless and until he shall have furnished the Engineer with a satisfactory certificate of insurance showing that the risks arising from the presence and use of explosives and from blasting are included within the insurance provided by the Contractor to secure his obligations to the City. Insurance should also cover damage to any utilities or other facilities.

Kind of Rock Paid For

Where a price for rock excavation has been bid and is applicable, only solid ledge rock, which required blasting, wedging or special tools for removal and boulders, which individually contain more than one-half cubic yard, will be paid for. Masonry structures, roadway pavements, concrete walks and pavements, old foundations, walls, etc. will not be paid as rock and will be removed as required without separate compensation. Loose disintegrated rock, loose shale, nested stones, hardpan and the like will not be paid for. If there is any question as to whether any material should or should not be classed as rock, all said questions must be referred to the Engineer for determination before the material is disturbed.

Backfill and Backfilling

Backfilling in public streets and highways shall be done in accordance with rules, regulations, laws and ordinances of the City of New Britain or the State of Connecticut depending upon which governmental unit is responsible for the maintenance of said streets or highways. It is the responsibility of the Contractor to ascertain and comply with the appropriate requirements.

Where, in the opinion of the Engineer, the soil in the bottom of the trench is unsuitable, additional material meeting the requirements of the NB Standard Specifications and approved by the Engineer, shall be brought in from outside sources to be used as bedding/backfill under pipe.

In all cases when backfilling trenches in City streets, the excavated material SHALL NOT be used as backfill, unless specifically approved in writing by the City Engineer. Suitable granular fill shall be brought in from an approved source to be used as trench backfill. It shall be placed in accordance with Section 2.12 of the NB Standard Specifications.

2.04.04 – Method of Measurement: Rock excavation shall be measured for payment per cubic yard of excavation within the payment lines shown on the plans, regardless of trench depth. In this contract, the payment lines shall extend to 6” below and 12” to both sides of the outside diameter of the pipe. For structures, 24” from all outside faces and 6” below the bottom of the base shall apply as limits.

2.04.05 – Basis of Payment: Rock excavation will be paid for at the Contract unit price bid per cubic yard, regardless of whether the rock was excavated by blasting or any other approved method, which unit price shall include the cost of all tools, labor, materials and equipment incidental thereto, as described herein.

Cross sections for payment shall be taken at least 25 feet apart or at the breaks in the grade, whichever is closer, or by profiling for the narrow trenches.

If required, Granular Fill will be measured and paid in accordance with Section 2.12 of the NB Standard Specification.

Processed stone shall be measured and paid in accordance with Section 2.11 of the NB Standard Specification.

Pay Item	Pay Unit
Rock in Trench Excavation	CY

SECTION 2.05
TEST PIT

2.05.01 – Description: The work under this Item shall be the excavation of test pits by the Contractor where it may be necessary to locate or examine soils, groundwater, drains, pipes, rock, public utilities, subsurface structures, or any other obstacles or conditions. Unless otherwise specified or ordered by the Engineer, test pits will be dug by the Contractor.

This work shall consist of the satisfactory removal of all materials including water, within the limits of the test pit as necessary. This work shall also include the satisfactory stockpiling, disposal of surplus or unsuitable material, backfilling and compacting of the test pit with suitable material as approved by the Engineer. This work shall be done where shown on the Contractor Drawings or where directed or approved by the Engineer. All work shall be done in conformance with the Applicable Safety Code.

This work shall be done only at the request of the City of New Britain Engineer. It shall not be done at the discretion of the Contractor.

2.05.03 - Construction Methods: The Contractor shall coordinate the excavation of all test pits with the respective utility owners having facilities in the vicinity of the location of test pits. If so desired by the respective utility owners, all or part of the work under this item may be accomplished by their crews and/or supervised by them. All utilities have been informed of the necessity of work under this Item and the Contractor shall give sufficient notice to the respective utility owners to afford reasonable time for coordination.

Unless otherwise specified, the Contractor shall dig test pits where indicated on the Contract Drawings, and the Contractor shall notify the Engineer of the results at least 14 days prior to the start of any underground installations within said test pit area. The Contractor shall notify the Engineer and/or utility companies of any conflicts uncovered which may require design revisions, relocations and/or adjustment. No work shall be started within these areas of conflict until so authorized by the Engineer.

Test pit excavation and backfill shall comply with the applicable provisions of the Item “Trench Excavation and Backfill” and shall have neat, clean cut and vertical sides.

The Contractor shall measure and record the size, configuration, and exact horizontal and vertical location of all utilities, pipes or other obstacles uncovered in the various pits dug under this Item.

The Engineer shall be notified well in advance of excavation so that he also may make the necessary measurements to locate all objects within test pits.

A. Excavation – Excavation of test pits shall be accomplished by such means as are required to ensure that underground utilities or structures as may be encountered are not damages. It shall be the Contractor’s sole responsibility of any damages incurred during the excavation operations. Any such damages shall be repaired or replaced by him (if permitted) to the satisfaction of the Owner/Responsible Agency/Engineer at the Contractor’s own expense. Where the repair and/or replacement

must be done by the Owner/Responsible Agency any and all costs thereof shall be borne by the Contractor.

B. Where an existing pavement has been removed for the test pit excavation, the surface shall be restored in accordance with the item “Permanent Pavement Repair” as ordered by the Engineer.

In all other areas, the surface of test pit areas shall be restored to a condition equal or better than original as directed by the Engineer.

2.05.04 - Method of Measurement: If the item “Test Pit” appears in the Bid Proposal, excavation for test pits will be measured for payment by the Engineer, and shall be the actual length, width and depth of the excavation within the limits ordered/approved by the Engineer. Water removed is never measured for payment.

Test pits will only be measured for payment where:

a) The location of the pit is such that said pit will never be incorporated into any excavation being dug for proposed work under this Contract.

b) The test pit will ultimately be within the limits of an excavation required for proposed work under this Contract, but said pit must be backfilled for safety or other reasons, as approved by the Engineer, prior to the excavation reaching the location of the pit.

If any pit is not backfilled and subsequently incorporated into the excavation, said pit will not be measured for payment under the Item “Test Pit” but will be measured under the appropriate excavation item.

Test pits dug by the respective utility owner will not be measured for payment.

2.05.05 - Basis of Payment: If the item “Test Pit” appears in the Bid Proposal, payment for the “Test Pit” shall be made at the contract unit price per cubic yard for “Test Pit”, which price shall include the excavation of all materials as required. Included in the unit price bid for Test Pit will be excavation, sheeting, shoring, dewatering, backfill, compacting and the restoration of the surface of the “Test Pit” and all other materials, equipment, tools, labor and work incidental to or necessary for the completion of the Item.

The restoration of any pavement surfaces and bases will be paid for in accordance with and under the temporary and permanent pavement repair items, or as directed by the Engineer.

Pay Item	Pay Unit
Test Pit	CY

SECTION 2.06
DITCH EXCAVATION

2.06.01 – Description: This work shall conform to Section 2.06 "Ditch Excavation' of the CTDOT Standard Specifications.

Pay Item	Pay Unit
Ditch Excavation	CY
Rock in Ditch Excavation	CY

SECTION 2.07
BORROW / SELECTED BORROW

2.07.01 – Description: When the amount of usable material excavated within the work contracted for is not sufficient to form the embankments, backfill trenches or other features of the work, additional material shall be furnished by the Contractor from borrow/selected borrow pits obtained by him at his expense and located beyond the limits of the project. This material shall be known as borrow/selected borrow. Borrow/selected borrow shall include the furnishing, removing and satisfactory placing of the additional material necessary to complete the embankments and other features of the work.

Hydraulically dredged and stockpiled material may be used for part, or all borrow/selected borrow requirements if it meets the requirements under materials. Stockpiles shall be placed at locations arranged for and provided by the Contractor at his expense and will not be allowed within the project area except at locations and under conditions stipulated by the Engineer. All permits, easements, rights or other requirements related to dredging and stockpiling shall be the obligation and responsibility of the Contractor.

2.07.02 – Materials: Materials for this work shall conform to the following requirements:

Borrow shall consist of inorganic granular soils and/or rock having not more than 20 percent by weight passing the No. 200 sieve. The maximum stone size shall be 1-1/2 inches for use as trench backfill or 5 inches for construction of embankments and the material shall be well-graded throughout the entire size range. Borrow shall be free from roots, leaves, and other organic materials. Rubbish, garbage or trash in any quantity shall not constitute a part of the borrow. Borrow shall also be free of ice or frost and no aggregations of soil particles shall be frozen. The moisture content of the borrow shall be within $\pm$3 percent of its optimum moisture content at the borrow source.

Selected Borrow will be free-draining material consisting of sound, hard, durable stone, run of the bank gravel, sand, or other acceptable granular material, the particles of which shall have a maximum size of 12 inches unless otherwise specified and shall be of such size that, of the portion passing the 4 inch square sieve, not more than 20 percent by weight, shall pass the No. 40 mesh sieve and not more than 10 percent by weight shall pass the No. 200 mesh sieve as determined by washing through the sieve in accordance with ASTM Test Designation D422.

Selected Borrow, shall include sufficient well graded material to fill any voids in the embankment/backfill area in its upper strata prior to placing any courses thereon.

2.07.03 - Construction Methods: Borrow/Selected Borrow will be permitted only to the extent necessary to complete the embankments, backfill trenches and similar details and only after all usable material from the excavation has been placed. However, with the prior written approval of the Engineer, the Contractor may be permitted to place borrow/selected borrow before the excavation is completed. This permission may be revoked by the Engineer at any time if, in his opinion, satisfactory progress is not maintained on other operations.

The Contractor shall notify the Engineer at least 15 days prior to obtaining material from any borrow pits so that an examination may be made of the fitness of the material. The limits of the proposed

borrow pit shall be shown to the Engineer and the Contractor shall be required to clear the area of all unsuitable material.

If the Contractor elects to obtain borrow/selected borrow from a commercial pit, it will be necessary for him to have a section of the pit set off for his use.

If the Contractor uses hydraulically dredged material, he shall, at his expense, employ effective dust control measures so that the public will not be adversely affected by dust from stockpiled material or such material in transit. The Contractor shall also provide and maintain at his expense effective and adequate drainage for all dredging and stockpiling operations at all times, and he shall be solely responsible for all damages which result from dredging and stockpiling and for the continuing maintenance and final restoration of all drainage facilities affected by his operations. Effective dust control measures will be required for borrow/selected borrow in transit from any source.

Borrow/selected borrow shall be placed where directed and in accordance with the specifications for the formation of embankments, swales and slopes under the Item "General Excavation and Embankment".

2.07.04 - Method of Measurement: The amount of "Borrow" or "Selected Borrow" to be paid for will be determined by the Engineer in place after compaction and within the payment lines shown on the Contract Drawings or as directed by the Engineer unless otherwise specified.

2.07.05 - Basis of Payment: Payment will be made for at the contract unit price per cubic yard for "Borrow" or "Selected Borrow" complete in place, which price shall include furnishing, shaping, clearing, placing and compacting the material and all other material, equipment, tools, labor and work incidental to or necessary for the completion of slopes, swales, embankments, cuts, ditches, channels or other such items.

No payment will be allowed for "Borrow" or "Selected Borrow" until all suitable excavation has been placed in the embankments or used for trench backfill, except with the prior written approval of the Engineer.

The contract unit price for "Borrow" or "Selected Borrow" shall also include the cost, if any, of restoration of the borrow area as required by the Local Regulatory Agencies or these Specifications.

Pay Item	Pay Unit
Borrow	CY
Selected Borrow	CY

SECTION 2.08
FORMATION OF SUBGRADE

2.08.01 – Description: Work under this item shall conform to requirements of Section 2.09 "Subgrade" of the CTDOT Standard Specifications.

Pay Item	Pay Unit
Formation of Subgrade	SY

SECTION 2.09
SUBBASE

2.09.01 – Description: All aspects of Project Work covered by this specification shall conform to Section 2.12 "Subbase" of the CTDOT Standard Specifications.

Pay Item	Pay Unit
Subbase	CY

SECTION 2.10
PROCESSED AGGREGATE BASE

2.10.01 – Description: All aspects of Project Work covered by this specification shall conform to requirements of Section 3.04 of CTDOT Standard Specifications, except as amended herein.

2.10.02 – Materials: Reclaimed miscellaneous aggregate is not acceptable.

Pay Item	Pay Unit
Processed Aggregate Base	CY

SECTION 2.11
PROCESSED STONE

2.11.01 – Description: Under this item, the Contractor shall furnish and place approved processed stone for the upper portion of trench backfill as shown on NB Standard Details or, when directed by the Engineer, for replacement of unsuitable material under pipe bedding material.

2.11.02 – Material: Processed stone shall conform to Article M.05.01 of the CTDOT Standard Specifications, except that reclaimed miscellaneous aggregate is not acceptable.

2.11.03 - Construction Methods: The Contractor shall furnish and place processed stone so as to provide an eighteen inch (18”) thickness immediately below the lower level of permanent pavement. The processed stone shall be placed and compacted in courses not to exceed 6”. The dry density of each course after compaction shall not be less than 95% of the dry density for that material when tested in accordance with AASHTO T180, method D.

If unsuitable material is encountered at the bottom of trench excavations, the Engineer may direct the Contractor to replace said unsuitable material with processed stone. If so directed the material shall be placed as described above.

2.11.04 - Method of Measurement: Processed stone for trench backfill will be measured for payment by the number of cubic yards in place after compaction completed and accepted, within the payment lines shown on the drawing. If required, the limits of placement outside of payment lines as shown on the Contract Drawings will be measured where placement is ordered by the Engineer.

2.11.05 - Basis of Payment: The work will be paid for at the Contract unit price per cubic yard of “Processed Stone” complete in place which price shall include all materials, tools, equipment, labor and work incidental to or necessary for the completion of the item.

Pay Item	Pay Unit
Processed Stone	CY

SECTION 2.12
GRANULAR FILL

2.12.01 – Description: This material shall be used as replacement for unsuitable material under pipe bedding, as trench backfill in City streets, or for other uses designated on the plans or as directed by the Engineer.

2.12.02 – Materials: Granular fill shall conform to the requirements of Article M.02.01 of CTDOT Standard Specifications.

2.12.03 – Construction Methods: Granular fill shall be placed and compacted in lifts not to exceed 6 inches. Extra care shall be used around culverts, structures, and other facilities when placing, consolidating, and compacting the material. All material shall be compacted to a dry density exceeding 95% of the dry density achieved by AASHTO T180, Method D. Each layer shall be compacted at near optimum moisture content. And, no subsequent layer shall be placed until the specified compaction is obtained for the previous layer.

2.12.04 – Method of Measurement: Granular fill will be measured in place after compaction within the payment lines shown, or as otherwise specified by the Engineer.

2.12.05 – Basis of Payment: This work will be paid for at the contract unit price per cubic yard for "Granular Fill", complete in place, which price shall include all materials, tools, equipment and labor incidental thereto.

Pay Item	Pay Unit
Granular Fill	CY

SECTION 2.13
BEDDING MATERIAL

2.13.01 – Description: The item shall consist of the furnishing, placing and compacting of sand or crushed stone to provide a cushion under and around pipes, as shown on the NB Standard Details or as ordered by the Engineer.

2.13.02 – Materials: Bedding material for rigid pipe shall conform to the requirements of Section M.08.01-21 of the CTDOT Standard Specifications.

Bedding material for flexible pipe shall conform to the requirements of Section M.01.01, No. 6 of the CTDOT Standard Specifications.

Geotextile for flexible pipe shall conform to the requirements of Section M.08.01-26 of the CTDOT Standard Specifications.

2.13.03 - Construction Methods: Construction methods for bedding material for rigid pipe shall conform to the requirements of the first four paragraphs of Section 6.51.03 of the CTDOT Standard Specifications.

Crushed stone bedding material for flexible pipe shall be placed within an envelope of geotextile and to the limits shown on the NB Standard Detail.

2.13.04 - Method of Measurement: Bedding Material shall be measured as described in Section 6.51.04-6 of the CTDOT Standard Specifications.

Geotextile, being included in the price for bedding material, will not be measured for payment.

2.13.05 - Basis of Payment: Bedding Material will be paid for at the contract unit prices per cubic yard for "Bedding Material for Rigid Pipe" or "Bedding Material for Flexible Pipe", complete in place, which prices shall include all materials, tools, equipment and labor incidental thereto.

Geotextile will not be paid separately but shall be included in the price of "Bedding Material for Flexible Pipe".

Pay Item	Pay Unit
Bedding Material for Rigid Pipe	CY
Bedding Material for Flexible Pipe	CY

SECTION 2.14
TEMPORARY SHEETING

2.14.01 – Description: The item shall conform to the requirements of Section 7.14 "Temporary Sheet piling" and 7.15 "Sheet Piling Material Left in Place" of the CTDOT Standard Specifications.

Pay Item	Pay Unit
Temporary Sheet Piling	SF
Sheet Piling Material Left in Place	SF

SECTION 3.01
MANHOLES

3.01.01 – Description: Work under these items shall consist of the construction of all manholes, block, poured in place concrete or precast, in conformity with the lines, grades, dimensions and details shown on the plans or as ordered and in accordance with the provisions of these specifications for the various materials and work which constitutes the completed structure. Manhole type shall be as follows:

- Type I (precast – 4' dia.)
- Type I Modified (outside drop)
- Type II (precast – 5' or 6' dia.)
- Type II Modified (inside drop)
- Type III (precast - flattop)

3.01.02 – Materials: The materials to be used in the construction shall be those indicated on the plans or ordered by the Engineer and they shall conform to the requirements of these specifications.

Concrete shall be Class "A" as specified in Section M.03.01 and as amended as follows:

(a) The mix proportion shall be 1:2:4.
(b) The maximum size of the coarse aggregate shall be 3/4".
(c) Minimum compressive strength shall be 3000 psi at 28 days.

Concrete building brick, masonry concrete units and brick shall conform to Section M.08.02.

All frames and covers shall be of standard City of New Britain design and specification and as detailed on the plans.

Watertight manhole castings shall be a Fay, Spofford and Thorndike Watertight #LTW300 – manufactured by E.L. LeBaron Foundry Company, Brockton, MA 02403, locations as noted on the plans.

Concrete and reinforcement steel for precast manhole risers shall be as specified in the current ASTM C-76, Specification. Manhole risers shall be as specified in the current ASTM C-478 Specification. 5' I.D., 4' I.D. and 3' I.D. Reinforced Concrete Riser Sections shall be supplied in 2', 3' and 4' lengths by a reputable manufacturer who shall have prior approval of the Engineer and the City of New Britain. The Contractor shall supply the precast risers with rubber "O" ring joints of Kent-seal (CS-202) all weather Butyl Rubber Flexible permanent gaskets. One (1") inch size for 4' manhole, one and a half (1-1/2") for 5' manhole.

Non-shrink mortar grout shall be used on the inside and outside of manhole precast section at joints, around existing pipe and for the shelf when building manholes over existing sewer lines (re: dog house manholes).

Brick shall conform to Section M.08.02-1 of the Standard Specifications.

Damp proofing materials for sanitary manholes shall conform to the requirements of Section M.12.05 of the CTDOT Standard Specifications.

Pipe for drops shall be P.V.C. conforming to Section 3.03 of these specifications.

3.01.03 - Construction Methods: Trench Excavation and/or Rock Excavation and Backfill for manholes shall be done in accordance with the excavation provisions of the Trench Excavation item and/or Rock in Trench Excavation item found elsewhere in this specification.

All manholes and structures shall be block, pre-cast or poured in place concrete and constructed as shown on the plans. All reinforcing steel shall conform to Section 4.02 of the NB Standard Specifications.

All new sanitary manholes shall have a synthetic rubber flexible pipe to manhole connector employed in the connection of the sanitary sewer pipe. The connector shall be "Kor-N-Seal" as manufactured by NPC Systems, Inc., Milford, New Hampshire or approved equal.

Existing concrete manholes shall have the pipe entrance core-drilled in the field and a flexible pipe to manhole connector, "Kor-N-Seal" or equal shall be installed.

The connector shall be the sole element relied on to assure a flexible watertight seal of the pipe to the manhole. No adhesives or lubricants shall be employed in the installation of the connector into the manhole. The rubber for the connector shall comply with ASTM C443 and ASTM C923. It shall be 3/8" (9.4mm) thick or greater, and consist of EPDM and Neoprene or elastomers designed to be resistant to ozone, weather elements, chemicals, including acids, alkalis, animal and vegetable fats, oils and petroleum products from spills.

All stainless steel elements of the connector shall be totally non-magnetic series 304 Stainless including the worn screw assembly for tightening the steel bank around the pipe. The worn screw for tightening the steel band shall be torqued by a breakaway torque wrench set for 60-70 inch/lbs.

The connector shall be installed in the manhole wall by activating the expanding mechanism in strict accordance with the recommendation of the connector manufacturer. The connector shall be of a size specifically designed for the pipe material and size being utilized on the project.

Existing manholes other than concrete manhole shall when the main sewer pipeline is PVC pipe have a PVC manhole adapter with an abrasive exterior as manufactured by GPK Products, Inc. Fargo, North Dakota Telephone 1-800-437-4670 or approved equal installed in the manhole.

The Contractor shall place Class "A" concrete in accordance with Section 6.01 of the CTDOT Standard Specifications amended as follows:

(a) Section 6.01.03 – Construction Methods, paragraph 22-
Test Beams and Cylinders shall be deleted and the following substituted:

The Contractor shall furnish the necessary concrete and several test cylinders from each day's run of concrete as directed by the Engineer and in accordance with ASTM C-31. The Contractor shall have a reputable testing laboratory, subject to the Engineer's approval, furnish the Engineers with the results of the test cylinders which shall be cured by the same method as used for the concrete which they represent and tested in accordance with ASTM C-39.

(a) Expansion, contraction and construction joints will be located as shown on the plans. Expansion joints shall be located at any point where the enclosure is partially in rock and partially in earth cut, or as directed by the Engineer.

(b) Section 6.01.04 – Method of Measurement and Section 6.01.05 – Basis of Payment are deleted.

There shall be no measurements made as to the quantity of concrete placed, and the cost for placing the same shall be included in the unit price bid for the special structures and manhole items.

No concrete shall be poured in cold weather unless the following precautions are complied with to prevent freezing.

When temperatures are 32 degrees to 35 degrees and rising, the water required shall be heated. After pouring, the finished concrete shall be covered immediately with dry mat or board upon which shall be placed six inches of hay or straw and another layer of mats. Protection time shall be 72 hours.

When temperatures are 24 degrees and above and rising, all ingredients shall be heated before mixing. Finished concrete shall be protected as described above except eight inches of straw or hay shall be used. Protection time shall be 72 hours.

Contractor shall submit to the Engineer for approval shop drawings showing the location, size, spacing of all reinforcing steel and certified and sealed calculations showing the precast manholes will take H-20 loading. Certification must be by a registered professional Engineer in the State of Connecticut. Test cylinders of the 5000 psi concrete shall be in accordance with paragraph 3a herein.

For temperatures below 24 degrees, all ingredients shall be heated before mixing. The finished concrete shall be immediately covered and heating device used to maintain a temperature of 70 degrees around the concrete for a period of 72 hours.

Any manhole or structure constructed during cold weather is done at the Contractor's risk and all damaged manholes or structures shall be removed and replaced at his own expense.

Manhole structures shall be shaped as shown on plans. In no case shall the inside bottom of a manhole structure be flat but shall have a smooth shaped invert with a depth equal to the diameter of the largest pipe connected to the manhole. The invert may be constructed of masonry brick or formed concrete with a smooth finish. No ladder rungs are to be installed in any City manhole. The cost of the manhole invert shall be included in the price bid for the manhole structure.

Manholes shall be covered with a City of New Britain standard cast iron frame and cover, or as otherwise specified. Until such time as frames and covers are set, manholes shall be kept covered with planks or temporary covering to protect persons and animals and to prevent foreign matter from entering the manhole.

All RC Pipe shall be recessed into the face of the manhole or structure and pipe reinforcing steel shall be covered with a minimum of 1-1/2" mortar. Provisions must be made for all pipes, (existing and proposed) and stubs entering the manhole.

All manholes or structures shall be watertight and sanitary manholes shall be damp proofed. Manholes or structures found having infiltration shall be repaired by the Contractor to the satisfaction of the Engineer.

The Contractor shall place a minimum of 6" of foundation material under all manholes. The cost of this foundation material, which is specified elsewhere herein, shall be included in the price bid for the manhole.

At least the top six (6) inches of each manhole shall be constructed of brick, for the purpose of adjusting the elevation of the frame and cover. The cast iron frame and cover shall conform to the plans and shall be well coated with an approved bituminous paint prior to being put into place.

The joints between the manhole frame and chimney or corbel section of sanitary manholes shall be sealed with an internal flexible rubber seal as manufactured by Cretex Specialty Products, Waukeska, WI, or approved equal.

The internal flexible Rubber Seal shall be extruded from a high grade rubber compound conforming to the requirements of ASTM C-923 with a hardness (durometer) of 45+5.

The sleeve shall be double pleated with a minimum unexpanded vertical height of 8 inches, a mimimum thickness of 3/16 inches and shall be capable of a vertical expansion when installed of not less than 2 inches. The top and bottom section of the sleeve shall contain an integrally formed expansion band recess and multiple sealing fins. Any splice used to fabricate the sleeve shall be hot vulcanized and have a strength such that the sleeve shall withstand a 180 degree bend with no visible separation.

The expansion bands used to compress the sleeve against the manhole shall be 16 gauge stainless steel conforming to ASTM A-240 type 304, with a minimum width of 1-3/4 inches. The expansion mechanism shall have the capacity to develop the pressures necessary to make a watertight seal and shall have a minimum adjustment range of 2 diameter inches. Screws and nuts used for this mechanism shall be stainless steel conforming to ASTM F-593 and 594, type 304.

Cast iron frame shall be set to a full, even bearing on a 1" minimum cement mortar bed at the required line and grade. The flange of the frame shall not project outside of masonry on which it rests. Inner circle of frame shall not overhand more than one inch. After frames are set, care must be exercised that they are not moved or disturbed by other operations such as backfilling, paving work, etc., and if disturbed, shall be reset on fresh bed of mortar.

When the construction of a new manhole is in conflict with an existing sewer and/or it becomes necessary to divert the existing flow away from the new construction, then the Contractor shall supply the necessary labor, equipment and materials to divert the flow and he shall include the cost of same in the price bid for the applicable Manhole item.

When concrete blocks are used for the walls, they shall be laid by an experienced mason or bricklayer.

When existing sanitary sewers are to be connected to new manholes, the Contractor shall provide all necessary equipment, labor, and materials to make the connection and the cost of this work shall be included in the price bid for the applicable Manhole item.

When existing sewers are in conflict with the new manhole and the plans indicate that the existing sewer is to be plugged, the Contractor shall do the necessary work to plug the existing sewer as detailed in the plans and the cost of the plug shall be included in the price bid for the applicable manhole item.

On all manholes the cone section shall be set on the downstream side with the straight wall on the upstream side, the manhole casting shall be centered over the middle of the main channel of flow.

All manholes over 12’ deep shall be Type II 5’ inner diameter (min.).

All manhole drops shall be constructed as shown on the plan, Standard Detail or as directed by the Engineer.

If it becomes necessary to reset a manhole, it shall be done in conformance of applicable sections of Section 5.07 of CTDOT Standard Specifications.

All pavement replacement around manhole castings shall be to a minimum depth of 5 inches for a 5 foot diameter area. This area shall be compacted with extra care to provide good pavement densification around the manholes.

1. TESTING

All Sanitary Sewer manholes shall be vacuum tested before acceptance by the City with a vacuum testing machine as manufactured by NPC Systems, Inc., Milford, N.H. or approved equal. The testing shall be done after assembly at the manhole prior to brick work and casting placement. All lift holes shall be plugged with a non-shrink mortar and the seal between the manhole sections shall be in accordance with ASTM C923. The Contractor shall plug the pipe openings, taking care to securely brace the plugs and the pipe. After placing the vacuum tester set in place.

A. Inflate the compression band to effect a seal between the vacuum base and the manhole.

B. Connect the vacuum pump to the outlet port with the Valve open.

C. Draw a vacuum to 10” of Hg. and close the valve.

The test shall be considered to pass if the vacuum remains at 10” Hg. or drops to 9” Hg. in a time greater than one minute. If the manhole fails the initial test, the Contractor shall locate the leak and make proper repairs, then retest the manhole structure until such time that it passes the vacuum test.

3.01.04 - Method of Measurement: These items will be measured in units for each manhole constructed and accepted in place. The applicable depth shall be determined by measuring from the bottom of the footing to proposed rim elevation.

3.01.05 - Basis of Payment: This item shall be paid for at the contract unit price per manhole structure measured per unit complete and accepted in place. This price shall include the cost of all excavation, sheeting, shoring, dewatering, pumping, maintenance of existing flows, furnishing and installing foundation material, concrete, masonry brick, concrete blocks, brick or pipe inverts, inside or outside drops, stubs in manholes, precast sections, damp proofing, reinforcing steel, standard casting frame and cover, watertight manhole castings, manhole casting flexible rubber seals, core drilling, flexible pipe to manhole connector or adaptors, backfill, compaction, reconnection of existing sewers, plugging sewers to be abandoned and removal of existing structures to be abandoned, manhole testing and the required 5’ diameter 4’ pavement replacement around the manhole casting and all other labor, equipment and material necessary to complete the intended installation.

Where rock is encountered, it shall be paid for at the unit price bid per cubic yard for the “Rock in Trench Excavation” item and in accordance with payment lines which are 24” outside of the walls and to a depth equal to the elevation of the bottom surface of the base slab.

Pay Item	Pay Unit
(Sanitary or Storm) Manhole Type I	EA
(Sanitary or Storm) Manhole Type I Modified	EA
(Sanitary or Storm) Manhole Type II	EA
(Sanitary or Storm) Manhole Type II Modified	EA
(Sanitary or Storm) Manhole Type III	EA
Reset Manhole	EA

SECTION 3.02
CATCH BASINS, YARD DRAINS

3.02.01 – Description: All aspects of project work covered by this specification shall conform to Section 5.07 "Catch Basins, Manholes and Drop Inlets" of the CTDOT Standard Specifications, amended as follows:

Delete all references to "Manholes" as they are included in Section 3.01 of these specifications.

Replace all references to "Drop Inlets" with "Yard Drains".

3.02.03 – Construction Methods: add the following:

On precast units the catch basin top shall be set on a minimum of two (2) courses of brick, so that the casting can be adjusted in the future without disturbing the precast sections.

Pay Item	Pay Unit
Type (C or C-L) Catch Basin	EA
Type (C or C-L) Catch Basin over 10' deep	EA
Type (C or C-L) Double Catch Basin Type I	EA
Type (C or C-L) Double Catch Basin Type I over 10' deep	EA
Type (C or C-L) Double Catch Basin Type II	EA
Type (C or C-L) Double Catch Basin Type II over 10' deep	EA
Yard Drain	EA
Offset Catch Basin Type A	EA
Reset Catch Basin	EA

SECTION 3.03
STORM AND SANITARY SEWERS

3.03.01 – Description: Under this item, the Contractor shall install and connect storm and/or sanitary sewer pipe of the size, type and at the locations and grades as shown in the plans or as ordered by the Engineer. It shall include connecting laterals to main sewer.

This item will not be used to pay for sewer damaged in the course of operations due to the Contractor's negligence, as determined by the Engineer.

3.03.02 - : Materials: Type of pipe and joints, as ordered by the Engineer shall be as follows:

A. Specifications for Reinforced Concrete Pipe shall conform to ASTM C-76, amended to date and shall be Class IV, Wall B, unless otherwise noted on the plans; the minimum length shall be 8' except that shorter lengths are to be supplied where required. Each section of pipe delivered to the job shall be marked with the manufacturer's name, date manufactured and class. Reinforced concrete pipe used for sanitary sewer shall be coated on the inside including bell and spigot with coal tar epoxy coating equal to Koppers Corporation #300M.

All joints shall be mortar joints in accordance with Section 6.51 of the Standard Specifications, for storm sewers. Sanitary Sewers shall use Field F-103 Glipp Permanent Seal interlock pipe joint or approved equal.

B. PVC pipe sized 6" – 15" shall conform to ASTM D3034 with minimum wall thickness to SDR 35. PVC pipe sized 18"-27" shall conform to ASTM F679, with minimum wall thickness to Type 1, SDR 35. PVC pipe shall have factory-installed integral bell gasketed joints and conform to ASTM F477. Connection to manholes shall be by use of manhole coupling adapters or flexible rubber connections. PVC shall not be grouted directly to concrete.

C. All ductile iron pipe shall be new pipe manufactured in accordance with ANSI A21.51-80 or latest revision. Ductile iron pipe furnished shall conform to thickness class 50. Pipe joints shall be push-on type which employ "O" ring joints or equivalent. "O" rings shall be of an elastic compound resistant to ground water and sewage, which will endure permanently. All pipe shall have a cement mortar lining twice the thickness specified in ANSI A21.4.-80.

D. The materials used in the manufacture of wye and tees shall conform with the requirements for the pipe with which they shall be used and any variation of such requirements shall be subject to the approval of the Engineer. Fittings shall be manufactured or recommended by the manufacturer of the approved pipe. Field fabricated or fittings fabricated by other than approved manufacturer shall not be allowed unless approved by the Engineer. Joints shall be bell and spigot, push-on type using factory installed integral bell gasketed joints, as recommended by the pipe manufacturer.

Class "A" Concrete shall conform to Section M.03 of the CTDOT Standard Specifications.

3.03.03 - Construction Methods: All portions of Section 2.05.03 shall apply.

A) General

Sanitary Sewer pipe shall be of the sizes, types and materials indicated by the Contract Documents with no substitutions. All pipe shall be installed, supported, jointed, tested and backfilled as indicated or required for the particular job, location or condition by the Contract Drawings, Technical Specifications, or other contract documents. All pipe, when in place, shall be precisely true to the line and grade indicated therefore in the Contract Documents or directed by the Engineer, sound, well installed, jointed and bedded and free from defects.

Pipe installation in general shall start at the downstream and progress upstream with bell or groove ends placed upstream. If, however, due to the restrictions imposed by land acquisition and/or other construction activities, construction may be done in sections as approved by the Engineer.

Straight runs (not with bends) of sewer line pipes and laterals over 50 feet in length shall be installed to the line and grade by the use of lasers only. Such laser equipment shall be furnished by the Contractor and operated by competent personnel. Equipment and operating procedures shall be subject to the approval of the Engineer.

Where bends occur and on laterals less than 50 feet, the pipes shall be installed using a grade string stretched taut above the line of pipe between batter boards averaging 25 feet and not exceeding 30 feet apart and by measuring down to the bed for each prior to setting it in place and to the end of each pipe, when it has been placed, by means of a suitable grade pole, and brought to line with a plump bob, all of which tools and equipment shall be furnished and operated by competent Contractor's personnel satisfactory to the Engineer.

At the start of each job, when the Contractor is in a position to start installation pipe, he shall notify the proper representative of the supplying pipe company who will come to the job and thoroughly instruct the Contractor, his men and the Inspector in the proper methods of installation said pipe. The Contractor shall notify his men who are actually doing the installation that this method shall be strictly enforced unless otherwise specified or directed by the Engineer.

Details of gasket attachment and joint formation will, in general, follow the directions of the manufacturer of the joint material and of the pipe, based upon the design thereof and their experience with such joints elsewhere, all subject to the approval of the Engineer.

Pipe shall be installed and the joints made in the manner set forth by the manufacturer. Where applicable, immediately after pipes are put together, the position of rubber ring and the joint shall be inspected to be sure it has been properly put together. Gauges shall be furnished to the Contractor (and the Inspector) by the manufacturer for this purpose, and all joints shall be checked with such gauge. All defective joints shall be corrected immediately.

Wyes or tee connections for laterals or chimneys should be installed as shown on the contract drawings or as directed by the Engineer, in accordance with manufacturer's recommendations.

At any time during pipe-installation operations, if the occasion arises, when instruction or advice is required from a pipe representative, he shall be notified and shall come to the site of pipe-installation operations for consultation before any further pipe is installed involving any such problems.

Where the pipe connects with the outside faces of manhole walls or the outside faces of the walls of other structures, there shall be a short section of pipe (usually 2 feet) placed at the connections to the structure. In order to accomplish this, without cutting pipe and destroying water tight integrity by having other than the normal type joints, minor modifications in manhole locations may be made with the approval of the Engineer. See manhole specification for pipe tie-in requirements.

When crushed stone bedding is used around the pipe, provisions shall be made to physically prevent the encroachment into the voids between the stones of fine material present in the trench backfill material by placing the bedding and pipe within an envelope of geotextile, as shown on The Flexible Pipe Trench Standard Detail. The fabric shall be fitted around manholes and extend one foot up the manhole, all laps shall be a minimum of eighteen inches.

All new pipe installations shall be cleaned of all construction debris and left in new condition. Cost for this cleaning shall be included in the price of the new sewer pipe.

B) Inspection

1) One Inspector Per Pipe-Installation Crew

To enable the representatives of the Engineer to oversee pipe-installation and other work, in general, only one pipe-installation crew will be permitted to operate at any time under one Inspector. Thus, the number of pipe-installation crews and the number of locations at which pipe may be installed simultaneously under this contract may be limited by the number of Inspectors assigned by the Engineer to oversee that type of work on the Contract. If the Contractor wishes to install pipe at more than one location on a given day, or add additional pipe-installation crews, he must notify the Engineer at least two days in advance so that an adequate number of Inspectors may be assigned to the job.

2) Contractor to Assist Inspectors

The Contractor shall furnish materials, tools and men to assist the Inspector and to handle survey equipment, levels, grade poles, plumb bobs, straight edges, laser equipment, and other equipment used for transferring grades, setting strings on profiles or grade slats or aligning pipe. While Inspectors may at times assist or check alignment, the Contractor's crew shall not be dependent upon the Inspector for the performance of such work. All labor, tools and facilities needed to set or transfer line and grade, to measure pipe beds, pipe grade and line etc. shall be furnished by the Contractor.

C) Dewatering

1) General

The Contractor shall provide all necessary pumps, dams, drains, ditches, flumes, well points and other means for excluding and removing water from trenches, tunnels and other parts of the work, and for preventing the slopes from sliding or carving all in accordance with the item "Trench Excavation and Backfill".

2) Foundation Stone Drain

Where, in the opinion of the Engineer, some form of under-drainage is desirable but conditions do not warrant the installation of a pipe underdrain, he may order a installation of processed stone or granular fill placed under the normal pipe bedding material to serve as a drain or as additional foundation or both.

3) Engineer Need Not Order Underdrain

The Engineer will not be under any obligation to order underdrain of any type installed to lower groundwater levels in general or for other purposes when in his opinion, the underdrain is not needed for the construction of the sewer or structure at the point in question. The matter of when to order underdrain of any type at the expense of the Local Public Agency is solely at the discretion of the Engineer. The fact that the Engineer did not order the underdrain at any point shall not relieve the Contractor of his duty to properly dewater trenches.

D) Bedding Material for Sewers

This section refers to bedding material under the sewer and its appurtenances. It does not apply to street pavement foundations above the sewer and its appurtenances. It does not apply to street pavement foundations or other structures, which are covered by other sections of the specifications.

Generally, pipe will be installed on Bedding Material and back-filled as shown on the Standard Details. Where the soil in the subgrade is found to be soft, loose, freshly-filled earth, unstable or unsuitable as a base for the proposed sewer or appurtenances, the Engineer may, at his discretion, order it excavated to such additional depth and width as he may deem proper and replaced with Granular Fill, Processed Stone, Class "A" Concrete, or similar material as he may direct.

1) Pipe Installed on Bedding Material

Foundations of Bedding Material required by the Contract Drawings, other Contract Documents as ordered by the Engineer, shall be constructed as required or ordered. The top of the Bedding Material shall be brought carefully to the proper grade well tamped or compacted as may be directed and shaped for the barrel of the pipe and the pipe installed thereon.

2) Concrete Foundations

Where called for on the Contract Drawings or directed by the Engineer, Sanitary Sewer Pipe shall be constructed on a concrete slab, on a concrete cradle, on foundation stone with concrete cap or encased entirely in concrete. Slabs may be pre-poured ahead of sewer placement or

poured integrally with the cradle after the sewer is placed, at the option of the Contractor and subject to the approval of the Engineer.

Where pipe is to be installed on a foundation as described in preceding sections and encased or bedded in concrete above the base, it will be installed as described in those sections and then concrete will be placed on each side up to the height or extent required, using methods that will insure that all spaces under and on the sides of the pipe are completely filled. Concrete will be carried out to the trench walls or to sheeting resting against those walls or to the minimum required lines if such lines are stipulated for the job.

Where pipe is to be encased in concrete or installed in a Class "A" concrete cradle, as detailed on the drawings or directed by the Engineer, the pipe will be installed on wooden cross sills of adequate size and area to support the pipe to grade and line after excavating to required subgrade. Wooden wedges or shims and tie downs will be used to secure pipe in place and to proper lines and grades.

A pre-poured foundation will consist of a slab of Class "A" Concrete of the sizes and dimensions shown on the Contract Drawings and of such thickness and width as the Engineer may order, poured into space a sufficient time in advance of installation pipe thereon so that the concrete will have set prior to installation pipe.

The time required for and the degree of setting of concrete will be approved by the Engineer (minimum of three (3) days). The upper surface of the concrete base will be carefully leveled off to a grade about 2 inches below the bottom of the barrel of the pipe for sufficient width. The top of the pre-poured slab should contain adequate bell holes if bell-and-spigot pipe is to be installed. Pipe will then be installed to line and grade, using wooden shims or wedges as necessary, jointed as specified elsewhere, and then the space between slab and lower surface of pipe filled with concrete carried up to such height as my be required. Concrete will be poured in from one side until it appears flowing through into the other side. Backfill on sides of pipe above the concrete base will be as specified or as directed by the Engineer. Backfill shall not be placed thereon for two (2) days unless public safety requires otherwise.

E) Pipe Installation General

Pipe installation in general shall start at the downstream end and progress upstream. If, however, due to restrictions imposed by land acquisition and/or other construction activities, construction may be done in sections as approved by the Engineer.

1) Pipe Installed on Bedding Material

Where no underdrain, cradle, special bedding or haunching is required, the pipe shall be installed as follows:

The trench will be excavated to lines and grades shown on the drawings, the typical trench section or as ordered. Loose native material will be removed from the excavation.

The bedding material will be placed to the depth required by the Contract Drawings or Standard Details for the bedding and compacted, then shaped by hand just before the pipe is set in place to conform as nearly as possible to the shape and grade of the outside of the lower part of the pipe barrel and bells. The grade of this bedding material shall be measured and check at least once for each length of pipe, and in any case, at intervals of not more than 4 feet apart, immediately before pipe is installed upon the base. The base must be such that the barrel of the pipe will be evenly supported for its entire length. Pipe must not be supported by bells or by lumps of soil, sills, shims, etc. Pushing fine material under any pipe installation on its bed in order to bring it up to grade or line will not be permitted. The bed must be formed to the correct grade before the pipe is placed on it.

After preshaping the bedding material, the pipe will then be installed accurately to line and grade, pushed home against the end of the last pipe previously installed, and held in position. Sufficient bedding material as required shall then be placed on each side to hold the pipe in position while the joint is being made. Joints will then be made, as described elsewhere, and inspected. After the pipe has been installed, additional bedding material as required shall be added along the full width of the trench and compacted on the sides of the pipe to the height required by the Contract Drawings or Standard Details for trench excavation.

Holes under bells must be completely filled, suitable tools must be provided and used to ram the fill tightly under and against the rounded sides of the pipe so that all space on each side of each pipe is entirely filled with well-compacted material.

From the top of the bedding material to a point 1 foot above the top of the pipe, the trench shall be backfilled and compacted in layers not to exceed 6”, with granular material approved by the Engineer. P.V.C. pipe shall have 6” below and above and 12” on both sides of 3/4” stone bedding material.

The remaining trench area shall then be backfilled and compacted with granular fill (in City streets) or suitable approved material in accordance with the Item “Trench Excavation and Backfill”.

2) Pipe Installed in Rock Trench

In trenches excavated through rock, the rock shall be removed so that no projecting points or spurs of rock projects within 6 inches of the bottom of the pipe. The bottom of the trench shall then be filled with bedding material as required or ordered, including geotextile for flexible pipe, this fill being well tamped and compacted in place. Then the bedding material shall be smoothed off to grade for the pipe, bell holes provided, etc. and the backfilling and compacting under, around and directly over the pipe installed in rock cuts shall be as previously described. No fill of rock fragments larger than 3 inches in longest dimension will be allowed along the sides of the pipe or until the pipe has been covered to a depth of at least 2 feet with compacted material.

Where drawings or any Contract Document requires or the Engineer order pipe in rock trenches to be installed in a concrete bed, and for poured-in-place concrete structures, the space between

the face of the rock cut and the bottom and sides of the sewer or structure will be filled with concrete.

2) Sanitary Sewer Construction in Proximity to Water Main

The Engineer may vary the location of sanitary sewers in close proximity to water mains. No variations in location will be permitted without approval of the Engineer.

a) Horizontal separation – Sewers should be installed at least 10 feet horizontally from any existing or proposed water main. Should local conditions prevent a lateral separation of 10 feet a sewer may be installed closer than 10 feet to a water main if (1) it is installed in a separate trench, or if (2) it is installed in the same trench with the water mains located at one side on a bench of undisturbed earth and if in either case the elevation of the sewer is at least 18 inches below the invert of the water main.

b) Vertical separation – Whenever sewers must cross under water mains, the sewer shall be installed at such an elevation that the top of the sewer is at least 18 inches below the bottom of the water main. When the elevation of the sewer cannot be varied to meet the above requirements, the water main shall be relocated to provide this separation or reconstruct it with mechanical joint pipe for a distance of 10 feet on each side of the sewer. One full length of water main should be centered over the sewer so that both joints will be as far from the sewer as possible.

c) When it is impossible to obtain proper horizontal and vertical separation as stipulated above, both the water main and sewer shall be constructed of mechanical joint cast iron pipe or ductile iron pipe and shall be pressure tested to assure water tightness; or, the sewer shall be concrete encased for a distance of 10 feet on either side of the water main in accordance with the details shown on the Contract Drawings or as ordered by the Engineer.

F) Special Construction Methods

The following paragraphs shall apply as modifications to and detailed instruction for "Construction Methods, Pipe Installation General" for the particular type of pipe used. Only those portions of the "Construction Methods, Pipe Installation General" as are not modified hereafter, elsewhere in the Contract Documents or by the Engineer shall apply.

1) Reinforced Concrete Pipe (R.C.P.)

Prior to installation the pipe the spigot of the pipe shall be lubricated with an approved vegetable soap mixture (such as Diamond "A" soap gasket lubricant), which will not harm the rubber. The gasket shall then be placed on the spigot end and adjusted to equalize the tension within the gasket around its circumference. After the pipes are aligned in the trench, ready to be joined, all joint surfaces shall be cleaned, and immediately before joining the pipes together, the bell shall be completely covered with the same vegetable soap mixture. The pipe shall then be carefully pushed home into place without damage to pipe, gasket or bells of the pipes. Suitable devices must be used

to force the pipes together so that the joints will fit tightly with the inside and outside recesses providing a tight fit as recommended by the pipe manufacturer.

2) Polyvinyl Chloride Pipe (P.V.C.)

a) Handling and Storage

Pipe and fittings should be protected from direct sunlight. Store pipe in a horizontal position and supported along its entire length. Do not stack pipe over two feet high. As with any kind of pipe, PVC pipe should be handled with reasonable care to prevent damage.

b) Installation

Cutting Pipe – Use a handsaw, pipe cutter with a thin cutting wheel or power saw with a fine tooth blade. Cut the pipe square and remove burrs inside and outside with a knife or coarse file.

c) Allowable Transverse Pipe Deflection

Plastic pipe provided under this specification shall be so installed in the ground that the maximum transverse deflection ("out-of-round") shall not exceed 5 percent. Such transverse deflection shall be computed by dividing the amount of transverse deflection (normal diameter less minimum diameter when measured) by the normal diameter of the pipe.

After an initial inspection by the Engineer, if in his opinion the transverse deflection may be excessive, he may order the Contractor to arrange for and take accurate measurements of the pipe at whatever intervals and at whatever locations between such adjacent manholes as the Engineer deems advisable.

The Engineer may take or order such measurements to be taken at any time during the maintenance period. These measurements shall be taken in a manner and by such methods as approved by the Engineer.

3) Ductile-Iron Sewer Pipe (D.I.P.)

When joining Ductile-Iron Pipe with the push-on type joint, the inside of the bell and the outside of the spigot end shall be thoroughly cleaned to remove oil, grit, excess coating and other foreign matter. The circular rubber gasket shall be flexed inward and inserted in the gasket recess of the bell socket.

A thin film of gasket lubricant shall be applied to either the inside surface of the gasket or the spigot end of the pipe or both. Gasket lubricant shall be supplied by the pipe manufacturer and approved by the Engineer.

The spigot end of the pipe shall be entered into the socket and care exercised to keep the joint from contacting the ground. The joint shall then be completed by forcing the plain end to the bottom of the socket with a forked tool or jack-type tool or other device approved by the Engineer. Pipe that is not marked with a depth mark shall be marked before assembly to assure that the spigot end is inserted to the full depth of the joint. Field cut pipe shall be cut by a saw or pipe cutter (not by chisel or other unapproved methods) and the ends of these lengths shall be filed or ground to resemble the spigot end of such pipe as manufactured. Assembly instructions from the pipe manufacturer shall be strictly followed as approved by the Engineer.

G) Backfilling and Compacting

Backfilling and compacting of trenches above the bedding material shown on the details shall be performed in accordance with the item "Trench Excavation and Backfill".

H) Inspection and Testing

1) General

Upon completion of the installation and backfilling portions of the sanitary sewer, the pipe shall be inspected by one or several of the methods subsequently described. This inspection of testing shall be undertaken as the work progresses. The Engineer shall be notified in advance of such inspection and testing and the Contractor shall provide all facilities, materials, equipment and labor required for such testing. Such inspection and testing shall be a prerequisite for acceptance of all work. Sanitary manholes shall be tested in accordance with the manhole specification.

2) Visual Inspection

An inspection of the interior of the completed sanitary sewer pipe by direct visual inspection shall be made for all pipe installed from manhole to manhole. Any lights, equipment or labor necessary for such inspection shall be provided by the Contractor.

Any foreign material found in the interior of the sewer, any dirt, debris, or other objects shall be removed by the Contractor. Visible defects such as broken pipe sections, improperly installed gaskets, projecting connections, cracks, visible leaks or other defects shall be noted, corrected and the pipe re-inspected.

3) Inspection by Closed Circuit TV Camera is a Requirement

Upon completion of the infiltration, exfiltration or Air Testing of the new sewer lines (Sanitary and Storm Water) and completion of all tie-ins (Laterals) the Contractor shall make available the services of a portable closed-circuit television inspection camera with remote viewing receiver, as described in detail in the Item "Pipeline Video Inspection". These lines shall be televised, joint tested and sealed, if defective by the Contractor in the presence of the inspector with ownership of the video tape recording to remain with the Local Public Agency. This shall be done prior to acceptance of the work by the City.

4) Infiltration, Exfiltration, Air Testing

Where the groundwater level can be maintained at a height of not less than one foot above the top of the pipe for the full length of the section of sewer pipe being tested for leakage, the leakage into the sewers and manholes shall be determined through use of infiltration tests. When the groundwater cannot be maintained at a level of not less than one foot above the top of the pipe for the full length of the section of sewer being tested, the leakage from the sewers and manholes shall be determined through use of exfiltration tests. When approved by the Engineer, the Contractor may use low air pressure tests in lieu of exfiltration or infiltration tests for PVC pipes. The Contractor shall furnish the owner with certified copies of the leakage test results for the Owner's review and approval.

Allowable Infiltration and Exfiltration Rates

Infiltration and/or exfiltration rates shall not exceed the following rates for the types of pipes as listed:

Type of Pipe	Infiltration/Exfiltration Rate (gal./mile/inch diam./24 hrs.)
R.C.P.	100
D.I.P.	50
P.V.C. (Unless other modified)	50

These requirements will be met for every section (between manholes) of pipe; it is not a cumulative average over several sections of pipe.

Infiltration/Exfiltration rates shall be determined on the main sewer and shall be within the allowable rates for the pipe as specified above prior to the installation of any laterals. All wyes, tees and other fittings in the main sewer line shall be adequately capped or plugged to withstand the maximum anticipated head during exfiltration testing and to prevent debris, groundwater,etc. from entering during infiltration testing. Any caps or plugs which "blow-out" or leak shall be replaced as often as necessary by the Contractor at no additional cost to the Local Public Agency until the main sewer passes the infiltration/exfiltration test.

The first section of pipe (between two manholes) installed by each pipe crew will immediately be tested upon completion in order to check workmanship. The Engineer may call for infiltration or exfiltration tests any time on any section of pipe.

5) Exfiltration Testing

Where so required by the Engineer, after installation and jointing, sanitary sewer pipe shall be tested for leakage by internal water pressure. For this purpose, the Contractor shall furnish and install suitable temporary plugs or stoppers at appropriate intervals along the line, together with suitable riser pipes where manholes cannot be used, through which the pipeline under test may

be filled and the required water head applied to the section under test. Water put into the line initially to fill the pipe shall be metered with only the calculated volume of pipe and manholes in gallons allowed to be introduced into the system. In general, such tests will be made on sections extending from manhole to manhole, but sections or other lengths will be tested if conditions make that advisable. When the test is to be made, the Engineer shall be notified in advance, the pipe and manhole (or riser) filled with water to a level 5 feet above the highest point of the crown of the sewer tested or the groundwater level, whichever is greater, and head for not less than 4 hours, unless otherwise specified, during which time the rate of exfiltration shall be recorded by measuring volume of water used in restoring the water level in the manhole (or riser) to its original level. This general level shall be maintained at all times during the test. If the line fails, a second exfiltration test shall not be performed until the failure is repaired and enough days have passed to allow ground conditions to return to normal.

6) Infiltration Testing

If so directed by the Engineer, the sewer shall be tested for infiltration of groundwater at such time or times as the groundwater level is high and after the trench has been backfilled and compacted. The groundwater leakage into the pipe will be measured by the Engineer at such point or points as he may direct, preferably as he may direct, preferably as near the lower end of the section of sewer under test as practicable. The Contractor shall provide or construct suitably calibrated weirs, provide and set temporary stoppers with small pipes from which the flow of water may be measured, or other means of measurement as shall be required, and shall do such pumping as shall be necessary to enable the test to be properly made, and furnish labor to assist the Engineer, all without additional expense to the Owner.

Infiltration testing will be permitted only where the existing groundwater level can be shown to be at least two (2) feet above the highest point of the crown of the sewer being tested. Otherwise, exfiltration testing, as previously described, shall be required. The existing groundwater level shall be determined by direct measurement via an observation well pipe placed in the trench prior to backfilling. The lower end of the observation pipe shall be embedded in the foundation stone used for sewer bedding at approximately the sewer invert elevation, or lower, and the upper end at or above finished grade. Pipe so installed for dewatering purposes may be used for this purpose. Observation pipes shall be installed by the Contractor at no additional cost to the Local Public Agency in locations adjacent to manholes where ordered by the Engineer. They shall be removed upon acceptance of infiltration/exfiltration tests.

7) Test by Sections

After any such sections has been tested, the Engineer may, as his discretion, permit capped connections to be made with this section of sewers by other parties; said sections may not be put in service until all sewers contemplated under this Contract have been completed and test unless specifically waived by the Local Public Agency.

8) General

The phrase “per mile of pipes” shall refer to the total length of main sewer, measured through manholes, plus the lengths of all connections, laterals and branches.

The maximum allowable infiltration/exfiltration rate shall be as specified previously in these Specifications. Any sewers not in compliance with these requirements shall be corrected by the Contractor until such time as these rates can be met or approved by the Engineer. Such corrections as necessary shall be made by the Contractor at not additional cost to the Owner.

Temporary stoppers and testing facilities will be removed after this work has been completed and sewer restored in good order.

Should the section of pipeline fail to pass the infiltration/exfiltration test, the Engineer will require the Contractor to inspect the line (including closed circuit TV) to isolate the source of leakage and correct the same. No separate payment will be made for such inspection of corrective measures, the cost thereof being included in the unit cost bid for the various classes and sizes of sanitary sewers.

After such corrective work has been completed, measurements of the flow shall again be made. If the flow still exceeds the allowable rates, further corrective measures shall be taken and continued by the Contractor to reduce the infiltration until it shall, by measurement, be less than the allowable rate.

9) Low Pressure Air Testing – shall be undertaken in conformance with the following requirements, procedures and criteria:

a. Equipment shall be Cherne Air-Lot Equipment as manufactured by Cherne Industrial, Inc., Edina, Minnesota, Sewer Air Test System as manufactured by United Surveys, Inc., Cleveland, Ohio, or equal. Equipment shall meet the following minimum requirements:

i) Pneumatic plugs shall have a sealing length equal to or greater than the diameter of the pipe to be tested.

ii) Pneumatic plugs shall be able to resist internal test pressures without requiring external bracing or blocking.

iii) All air used shall pass through a single control panel.

iv) Three individual hoses shall be used for the following connections:

-From control panel to pneumatic plugs for inflation.
-From control panel to sealed line for introducing the low pressure air.
-From sealed line to control panel for continually monitoring the air pressure rise in the sealed state.

b. The equipment used to introduce the low pressure air into the sewer line shall include a safety valve or pressure relief device located in the equipment at a point which will insure that during the build-up of test pressure, the pipe line being rested will not be subjected to an internal pressure that could damage a properly installed sewer pipe.

All tests shall be conducted on the completed sewer pipe line between manholes and on the manholes individually per manhole specification.

All gages, controls and appurtenances for equipment used to conduct the test shall be located out of manholes. Connections to the line under test, test plugs and other equipment will be made with hose or pipe extensions which will safely contain the pressures necessary to conduct and control the test.

The gage used to measure the drop in pressure shall have a 4-inch diameter face, with a scale of 0 to 15 PSI in 0.1 PSI increments, or as approved by the Engineer.

The Contractor is cautioned herein of the importance of properly installing the end caps used to plug hubs, wyes, bends, ends of laterals, and other inlets, and securing them against movement, during the installation of the sewer. Failure to take this precaution can cause a properly installed sewer pipeline to fail the low pressure air test.

The Contractor is further cautioned regarding the safety of personnel during the test, low pressure air can exert a substantial force on a test plug, even on small diameter pipe plugs. The Contractor will be responsible to insure that all test plugs utilized are in good condition and that they will not be pressurized beyond the limits recommended by their manufacturer.

No one will be permitted in a manhole containing a test plug while air is under pressure in the pipeline being subjected to the test.

c) The following procedure shall be used in air testing:

i) All pneumatic plugs shall be seal tested before being used in the actual test installation. One length of pipe shall be installed on the ground and sealed at both ends with the pneumatic plugs to be used in the testing. Air shall be introduced into the plugs to be used in the testing. Air shall be introduced into the plugs to 25 psig. The sealed pipe shall be pressurized to 10 psig. The plugs shall hold against the 10 psig pressure without bracing and without movement of the plugs out of the pipe.

ii) After a manhole to manhole reach of pipe has been backfilled, cleaned, flushed and the pneumatic plugs tested, the test plugs shall be installed in the pipeline being subjected to the low pressure air test and braced as necessary to secure the plugs in place and inflated to 25 psig.

The Contractor shall determine the elevation of the ground water table in the area of the pipeline being subjected to the low pressure air test, in a manner approved by the Engineer.

Utilizing the approved equipment, air at low pressure will be slowly introduced into the pipeline until the pressure within the pipeline being tested increases to 4 PSIG greater than the back pressure exerted by the ground water table over the pipe being tested, (back pressure = 1 PSIG per 2.31 feet of water). Ground water back pressure shall be determined by measuring the average height of the ground water table in feet above the invert of the section of pipe being tested. The height in feet shall be divided by 2.31 to determine the pounds of pressure that shall be added to all test pressures. For example, if the average height of ground water over the pipe invert is 11.5 feet; the pressure to be added would be 5 PSIG (11.5/2.3 = 5.01). If the water table is not at a level above the pipe, the test pressure should be brought up to 4 PSIG. Allow at least 2 minutes to elapse prior to starting the test. If necessary, allow a small amount of air to slowly enter into the pipe line in order to maintain a pressure of 4 PSIG above the back pressure due to the water table, or 4 PSIG if there is no back pressure to compensate for, and allow an additional two minute stabilization period.

After the stabilization period (3.5 PSIG minimum pressure in the pipe) the air hose from the control panel to the air supply shall be disconnected. The portion of line being tested shall be termed "Acceptable" if the time required in minutes for the pressure to decrease from 3.5 to 2.5 PSIG (greater than the average back pressure of any ground water that may be over the pipe) shall not be less than the time shown for the given diameters in the following table:

MINIMUM DURATION FOR AIR TEST PRESSURE DROP

Pipe Diameter In Inches	Minutes (Minimum)
4	2.0
6	3.0
8	4.0
10	5.0
12	6.0
15	7.0
18	8.5
21	10.0
24	12.0
27	13.0

Any section of pipeline which fails to meet the infiltration, exfiltration or low pressure air tests, including manholes will be repaired or replaced as necessary by the Contractor and retested, at no additional expense to the Owner.

The Contractor will be responsible for all costs, and de-installs incurred due to efforts to locate and repair any leaks in any sewer pipeline which fails the required tests, regardless of whether the failure is due to workmanship, material failure, the result of an improperly installed or braced end cap; or any sewer line damaged due to failure to provide a properly sized and operable safety valve or pressure release device, on the testing equipment for protection of the pipe being tested.

No sewer line will be considered acceptable until is successfully passes the requirements of these tests.

All testing will be conducted by the Contractor in the presence of the Inspector. The Contractor shall keep a written record which will show the results of the tests conducted. The record should include sufficient data on length of line, pressure levels, time for pressure drop, and related features noted during the testing of each segment of the line. A copy of this record shall be given to the Engineer/Owner.

I) Connections and Provisions for Connections

a) Outlets, laterals, stubs, clean-outs, connection chimneys, etc. required to connect existing sewers to the new sewer or to provide for future connections shall be furnished and set where and as indicated on the Contract Drawings or as ordered by the Engineer. Since the number required or their locations cannot be fully determined in advance, the actual number and exact locations shall be determined as the work progresses. The Contractor shall be responsible for determining the location of all existing connections and reconnecting the same to the new sewer. The number and location for future connections shall be determined by the Engineer. Where they are set by the Contractor solely for his own convenience for temporary connections, temporary drainage, or to maintain existing flows even if set with the permission and approval of the Engineer, they will not be paid for.

i. Capped Outlets (Wyes and Tees)

Unless otherwise shown or specified or ordered by the Engineer: all capped outlets for PVC pipe (mainline sewer) shall consist of wyes with appropriate 45/30 degree bends to form a right angle with the sewer; for RCP or DIP (mainline sewer) the outlet shall be a tee; tee outlets on RCP shall be flexible watertight pipe to pipe tee connectors for outlet diameters up to 10 inches (nominal) and RCP bells for outlet diameters over 10 inches nominal; minimum outlet size shall be 6 inches; outlets in sheeted trenches shall be extended to the trench edge with appropriate “shorts” (with a bell end) and the sheeting cut and removed at the outlet; and all outlets shall be capped and marked as elsewhere herein specified.

ii. Laterals

Capped Laterals - shall be installed to permit the future connection of house/building sewers. They shall be of the type and size (6 inch min.) specified and installed to the grade and to the point shown on the Contract Drawings, specified herein, as required to serve an existing house/building, or as ordered by the Engineer. They will not be installed on a grade flatter than one percent, and will usually have 8 feet of cover at the curb or street line in most residential streets or zones. On business streets, or streets adjacent to the business section of the city, or where the adjacent land is low, they will have not less than 10 feet of cover at the curb, if possible.

Unless otherwise directed, the entire lateral trench shall be excavated to the required grade before any pipe is installed therein to confirm setting of the lateral at the required invert elevations without conflict, or to allow for grade adjustment.

Care shall be taken to make smooth, closefitting joints. Pipes shall be trimmed or extra bends used (when ordered) for this purpose. All requirements for installation, as described elsewhere herein, shall be observed in installation capped lateral, insofar as those requirements apply. All capped laterals shall terminate with a "bell" end which shall be closed with a cap/plug before being placed in the trench and marked, as described elsewhere herein.

Capped laterals shall extend from a manufactured outlet set in the main line sewer which outlet shall conform to the applicable requirements herein for capped outlets.

Reconnection Laterals - shall be installed to permit the connection of existing house/building sewers to the new sewer and shall be of the type and size (6 inch min.) specified.

The reconnection lateral shall be connected to the main line sewer in accordance with the following:

For DIP (main sewer) the connection shall be made to a plant manufactured unit with the provision for connection formed integrally therewith or by burning an opening of the appropriate size in the pipe and brazing thereto a "m-D Cut-In Connection" as manufactured by the Joseph G. Pollard Co., Inc. or approved equal in accordance with the manufacturer's recommended installation procedures, the details shown on the Contract Drawings or as directed by the Engineer. The "M-D Cut-In Connection" shall be encased with a concrete collar in accordance with the details shown on the Contract Drawings or as directed.

For PVC (main sewer) the connection shall be made by cutting an opening of appropriate size through the wall of the pipe and installing, by solvent welding, thereover a saddle type fitting as supplied by the pipe manufacturer in accordance with recommended installation procedures, the details shown on the Contract Drawings or as directed by the Engineer.

For R.C.P. (main sewer) less than 30 inches in diameter, the connection shall be made to a manufactured unit having the outlet formed integrally therewith by the pipe manufacturer or as prefabricated by the Contractor the job site (not in the trench) at least 2 days prior to its intended use in accordance with the recommendations of the pipe manufacturer, as shown on the Contract Drawings or directed by the Engineer.

For R.C.P. sanitary and storm water sewers the pipe to lateral connection shall be made by core-drilling the required 6" hole and installing a flexible watertight pipe to pipe connector in the field at each house lateral. The equipment used shall be a

Vertakor 700 Core Drill and Kor-N-Tee water tight connectors as manufactured by NPC Systems, Inc., Milford N.H. or approved equal.

The connector shall be the sole element relied to assure flexible watertight seal at the location where the two pipes are connected. No adhesives or lubricants shall be employed in the installation of the connector. The rubber for the connector shall comply with ASTM C443, be of molded one-piece construction, shall be 3/8" (9.4 MM) thick or greater and consist of EPDN and Neoprene or elastometers designed to be resistant to ozone, weather elements, chemical including acids, alkalis, animal and vegetable fats, oils and petroleum products from spills.

The connector shall be installed in the wall of the pipe by activating the expanding mechanism in strict accordance with the recommendation of the connector manufacturer.

All stainless steel elements of the connector shall be totally non-magnetic series 304 stainless including the worm screw assembly for tightening the steel band around the pipe. The worm screw for tightening the stainless steel band shall be torqued by a break-away torque wrench set for 60-70 inch/lbs.

The connector shall be of a size specifically designed so as not to protrude more than 1/8" inside the pipe. The connector shall contain an internal shoulder which shall act as a stop for the incoming lateral.

For R.C.P. (main sewer) larger than 30 inches in diameter, the connection shall be made in accordance with e. above or to the pipe in the trench in accordance with the details shown on the Contract Drawings or as directed by the Engineer.

iii) Stubs

Stubs constructed from manholes or structures for future use shall be as indicated on the Contract Drawings or as ordered by the Engineer and shall be capped/plugged as specified elsewhere herein.

iv) Connection Chimneys

Connection chimneys shall be constructed to facilitate making connections to the sewer where the sewer is in deep cut, either for connections installed under this Contract or for future use. All pipe and fittings shall be well lined up and fitted together. The vertical pipe and lower half of bends shall be precast or cast-in-place surrounded with and embedded in a pier of concrete as shown on the drawings. When the chimney is complete except for the top cap, a pole or rod shall be run down through the chimney from the top to the invert of the sewer below in the presence of the Engineer to make sure the chimney is clean and without obstructions and to measure the actual "as-built" height

of chimney. Thereafter a cap shall be set in the upper, or straightaway end of the pipe forming the top of the chimney, and secured into place.

v) Caps/Plugs

Unless otherwise specified or approved by the Engineer, all caps/plugs for sealing outlets, laterals, stubs, connection chimneys, etc. shall be manufactured units set in the bell in accordance with the manufacturer's recommended installation procedures as approved by the Engineer.

All caps/plugs shall be installed such that their removal in the future can be made without damage to the bell and they shall be capable of withstanding the maximum anticipated head during exfiltration testing.

b) Sheeting - shall be cut away and removed in front of all capped outlets, laterals, stubs, connection chimneys, etc.

c) Markers at Capped Outlets, Capped Laterals, Stubs, etc.

The Contractor shall provide that, a piece of #8 reinforcing rod (1") will be set vertically and left in place, extending from a point directly in front of but not in contact with the outer end of a capped outlet, capped lateral, etc., to a point about 2 feet below the ground surface or finished grade to guide persons who in the future years may have occasion to excavate to find the outlet, lateral, stub etc. and to protect the same from damage then making such excavation.

Where an existing pipe is to be replaced or re-installed, the new pipe shall be of the same type as the existing pipe, if the existing pipe is RCP, PVC or DIP. In all other cases the existing pipe shall be replaced with PVC. All replacement pipes should conform to requirements of 3.03.02. In no case shall a building connection be less than 6" in size.

All catch basin connections shall have a minimum grade of 1.0% and a minimum cover of 2'-0" unless otherwise approved. All other pipe shall have a minimum grade of 1.0%.

Where replaced or reinstalled sewer is to be connected to an existing City sewer, the Contractor shall obtain any permits necessary from the City prior to starting work.

When connecting to an existing sewer, every effort shall be made to connect the new pipe to an undamaged spigot or bell end of the existing pipe. If necessary, the new pipe should be installed progressing in a downstream direction. When making the connection to an existing spigot, a concrete collar shall be poured around the pipe to make the joint watertight or use of a elastomeric rubber sleeve with stainless steel clamps shall be allowed.

If it is not possible to connect to an existing joint as determined by the Engineer, connection shall be made with a concrete collar or by the use of an elastomeric rubber sleeve with stainless steel clamps (i.e. Fernco Flexible couplings or equivalent).

As necessary, the Contractor shall provide the necessary fittings and adapters to effect connection to existing pipes.

When connecting the new line to an existing manhole, the connection to the structure shall be watertight, smooth and at the same elevation as the existing manhole channel and to the approval of the Engineer.

3.03.04 – Method of Measurement: Measurement for payment will be that actual number of linear feet of pipe of the appropriate size, complete and accepted, measured in place, through all wyes, tees, etc., along the centerline of the pipe from center line of manhole to center line of manhole, with the interior diameter of the manholes deducted from the measurement.

3.03.05 – Basis of Payment: This work will be paid for at the Contract price per linear foot of the appropriate size pipe, complete and accepted in place. The unit price shall include the cost of all permit fees, removal of existing pipes and structures, cutting and plugging of existing sewer pipes, furnishing and installation all pipe and pipe fittings, connection to new or existing pipes or structures including brick and mortar, reinforced concrete collars, geotextile, core-drilling, flexible couplings, testing, cleaning and labor, equipment and materials incidental thereto, and the T.V. inspection, Joint Testing and Sealing and video tape or DVD as required.

Excavation and Bedding Material will be paid under appropriate items.

Wyes, tees and other fittings will not be paid separately but will be measured as described in 3.03.04 above. Payment for wyes, tees or other fittings shall be included in the LF price of sanitary or storm sewer on which they are installed and shall include the cost of furnishing and placing caps and “O” ring gaskets to seal off connections that are placed for future use, all 3/4” stone bedding, foundation stone (approximately two cubic feet of 3/4” crushed stone for each wye or tee).

Class “A” Concrete will be measured and paid in conformance with Section 4.01 of these specifications.

Pay Item	Pay Unit
(size) Reinforced Concrete Pipe - (sanitary or storm)	LF
(size) Polyvinyl Chloride Pipe - (sanitary or storm)	LF
(size) Ductile Iron Pipe - (sanitary or storm)	LF

SECTION 3.04
STORM AND SANITARY SEWER LATERALS, CHIMNEYS AND CLEAN-OUTS

3.04.01 – Description: Under this item, the Contractor shall furnish and install storm and/or sanitary sewer connections of the size (6" to 20"), type and at the locations and grades as shown in the plans or as ordered by the Engineer.

Also included in the section are precast or cast-in-place chimneys, and lateral clean-outs, if required.

This item will not be used to pay for sewer damaged in the course of operations due to the Contractor's negligence as determined by the Engineer.

3.04.02 – Materials: Type of pipe and joints, as ordered by the Engineer shall be as follows:

A) Specifications for Reinforced Concrete Pipe shall conform to ASTM C-76, amended to date and shall be Class IV, Wall B, unless otherwise noted on the plans; the minimum length shall be 8' except that shorter lengths are to be supplied where required. Each Section of pipe delivered to the job shall be marked with the manufacturer's name, date manufactured and class. Reinforced concrete pipe used for sanitary sewer shall be coated on the inside including bell and spigot with coal tar epoxy coating equal to Koppers Corporation #300M.

All joints shall be mortar joints in accordance with Section 6.51 of the Standard Specifications for storm sewers. Sanitary sewer shall use Field F-103 Glipp Permanent Seal Interlock pipe joint or approved equal.

B) PVC pipe sizes 6" – 15" shall conform to ASTM D3034 with minimum wall thickness to SDR-35.

PVC pipe sizes 18" – 27" shall conform to ASTM F 679 with minimum wall thickness to Type I, SDR-35.

PVC pipe shall have factory-installed integral bell gasketed joints and conform to ASTM F477. Connection to manholes shall be by use of manhole coupling adapters or flexible rubber connections. PVC shall not be grouted directly to concrete.

C) Ductile iron pipe shall be Class 50, new pipe manufactured in accordance with A.W.W.A. C151, ANSI A21.51-81 or latest revision thereof with outside tar coating and cement lined inside.

D) Precast chimneys shall be of the type shown on the Standard Detail and conform to current industry standards for the intended use. Shop drawings or catalog cuts shall be submitted to the Engineer for approval prior to purchasing materials.

E) Clean-out pipe and bends shall be P.V.C. as specified above.

F) New lateral connection to existing sewer main shall be "Inserta-Tee" or approved equal.

G) Class “A” concrete shall conform to Section M.03 of the CTDOT Standard Specifications.

3.04.03 - Construction Methods: For forced main sanitary sewers under pressure, harnessed joints shall be installed at locations and in accordance with the details shown on the Plans. Ductile iron pipe, fittings, flexible couplings, socket clamps for harnessing, shall be coated with two layers of Inertol 49 to a total dry film thickness not less than 4 mils.

Applicable portions of Section 3.03.03 and Section 2.05.03 shall apply.

Where an existing pipe is to be replaced or re-installed, the new pipe shall be of the same type as the existing pipe, if the existing pipe is RCP, PVC or DIP. In all other cases the existing pipe shall be replaced with PVC. All replacement pipes should conform to requirements of 3.03.02. In no case shall a building connection be less than 6” in size.

All catch basin connections shall have a minimum grade of 1.0% and a minimum cover of 2’-0” unless otherwise approved. All other pipes shall have a minimum grade of 1.0%.

Where replaced or re-laid sewer is to be connected to an existing City sewer, the Contractor shall obtain any permits necessary from the City prior to starting work.

When connecting to an existing sewer, every effort shall be made to connect the new pipe to an undamaged spigot or bell end of the existing pipe. If necessary, the new pipe should be laid progressing in a downstream direction. When making the connection to an existing spigot, a concrete collar shall be poured around the pipe to make the joint watertight or use of an elastomeric rubber sleeve with stainless steel clamps shall be allowed.

If it is not possible to connect to an existing joint, as determined by the Engineer, connection shall be made with a concrete collar or by the use of an elastomeric rubber sleeve with stainless steel clamps (i.e. Fernco Flexible couplings or equivalent).

As necessary, the Contractor shall provide the required fittings and adapters to effect connection to existing pipes. P.V.C. pipe shall have 6” below and above, and 12” on both sides of 3/4” stone bedding material.

When broken stone bedding is used around the pipe, provisions shall be made to physically prevent the encroachment into the voids between the stones of fine material present in the trench backfill material by placing the stone bedding material and pipe within an envelope of geotextile as shown on the Standard Detail for flexible pipe trench excavation. The geotextile shall be fitted around manholes and extend one foot up the manhole, all laps shall be a minimum of eighteen inches.

Connection chimneys shall be constructed to facilitate making connections to the sewer where the sewer is in deep cut, either for connections installed under this Contract or for future use. All pipe and fittings shall be well lined up and fitted together. The vertical pipe and lower half of bends shall be precast or cast-in-place surrounded with and embedded in a pier of concrete as shown on the drawings. When the chimney is complete except for the top cap, a pole or rod shall be run down through the chimney from the top to the invert of the sewer below in the presence of the Engineer to make sure the chimney is

clean and without obstructions and to measure the actual "as-built" height of chimney. Thereafter a cap shall be set in the upper, or straightaway end of the pipe forming the top of the chimney, and secured into place.

Sewer connection clean-outs shall be constructed as shown on Contract Drawings, Standard Details or as directed by the Engineer.

3.04.04 – Method of Measurement: Sewer connections will be measured by the actual number of linear feet of connections of the appropriate size, complete and accepted, measured in place, along the centerline of the pipe, from the face of the wye/tee on the main line sewer to the end of the installed lateral.

Chimneys will be measured by the actual number of vertical linear feet of chimney complete in place and accepted, along the center line of the chimney from the face of the wye/tee connection on the mainline to the top of the cleanout cap.

Clean-outs will be measured for payment as a unit.

3.04.05 – Basis of Payment: Sewer connections will be paid for at the contract unit price bid per linear foot of the appropriate size and type of sewer connection, complete and accepted in place. The unit price shall include the cost of all excavation, sheeting, dewatering, removal of existing pipes and structures, cutting and plugging of existing sewer pipes, furnishing and laying all pipe and pipe fittings, connection to new or existing pipes or structures including brick, mortar, core-drilling and adapter, reinforced concrete collars, special connections to existing sewer mains, geotextile, and all labor, equipment and materials incidental thereto.

Also included in the unit price of sewer connection is the cost to locate existing house lateral or wye/tee connection.

Chimneys will be paid for at the contract unit price bid per vertical linear foot of the size and type of chimney. The unit price shall include, but is not limited to the cost of all excavation, sheeting, dewatering, furnishing and installing required chimney, either cast-in-place or precast, fittings, wyes, tees, caps, concrete, connection to sewer lateral, reinforced concrete collars, and all labor, equipment and materials incidental thereto.

Clean-outs will be paid for at the contract unit price bid per each clean-out of the appropriate size and type, complete and accepted in place. The unit price shall include, but is not limited to the cost of all excavation, sheeting, dewatering, furnishing and installing required clean-out, fittings, wyes, tees, caps, connection to sewer lateral, and all labor, equipment and materials incidental thereto.

Class "A" Concrete will be measured and paid in conformance with Section 4.01 of these specifications.

Pay Item	Pay Unit
(size) (type) (sanitary or storm) Sewer Connection	LF
(sanitary or storm) Chimney	VLF
(sanitary or storm) Clean-out	EA

SECTION 3.05
UNDERDRAINS AND EDGEDRAINS

3.05.01 – Description: This work shall conform to Section 7.51 "Underdrains and Outlets" of the CTDOT Standard Specifications, as amended herein.

Edgedrains shall be installed as shown on the NB Standard Detail "Underdrain and Edgedrain" and shall conform to applicable parts of Section 7.51 "Underdrains and Outlets" of the CTDOT Standard Specifications

Pay Items	Pay Unit
(size – type) Underdrain	LF
(size – type) Edgedrain	LF

SECTION 3.06
SEWAGE FLOW BYPASS PUMPING

3.06.01 – Description: Under this item the Contractor shall maintain and control all existing sanitary sewage flow between every other manhole while the new sanitary sewer is laid directly on the same line as the existing. (NO sewage will be allowed to be pumped into storm manholes, catch basins, culverts, streams or rivers.) All flows, including the peak flows must be pumped from the manholes on either side of the one being worked on. It shall be required that a standby pump be on the job in the event of failure of one of the pumps. In the event of rainfall the Contractor shall make provision to allow a quick reconnection of the proposed sewer to the existing sewer to prevent sewage back-ups into the homes.

No construction shall be undertaken until adequate pumping equipment as described above is on the job site.

The Contractor shall furnish all labor, equipment, materials and perform all operations in connection with pumping sewage.

3.06.02 – Materials: The pumps used for handling sewage flow can be of any suitable type for this application as recommended by the manufacturer. It should be noted that the existing lines carry a high peak flow and that at times of rainfall the new sewer shall be reconnected to the existing sanitary sewer.

3.06.03 - Construction Methods: The Contractor shall submit, for review and approval of the City Engineer, a design, including drawings and calculations, for a sewage flow bypass system required by the contract.

The Contractor shall obtain the necessary plugs to stop flow at the manholes. The type of plug used shall be first approved by the Engineer.

The excavations shall be kept dry at all times and protected against sewerage flow by having a standby pump as a back up.

Any damage to existing facilities or new work resulting from the failure of the Contractor to maintain the work areas in a dry condition shall be repaired by the Contractor, as directed by the Engineer, at no additional expense to the City. Pumping will be continuous or as necessary to protect the work.

In order to work on a section of sewer, it will be necessary to pump from an upstream manhole which is plugged off to two manholes downstream. In this way the manhole in between and the pipe in between the two manholes used to deliver and receive raw sewage can be worked on to a point just short of the upstream manholes. Any deviation from this construction procedure shall be approved first by the Engineer.

3.06.04 – Method of Measurement: This item shall be paid for on a lump sum basis and will not be measured for payment.

3.06.05 – Basis of Payment: This work will be paid by the lump sum unit price, which shall include all labor, equipment, two adequate and suitable pumps, materials, supplies, tools, maintenance, removal and all incidental costs and appurtenant work necessary to satisfactorily complete the item as specified and directed.

Pay Item	Pay Unit
Sewage Flow Bypass Pumping	LS

SECTION 3.07
PIPELINE CLEANING AND VIDEO INSPECTION

3.07.01 – Description: The work covered by this Section of the Specifications consists of furnishing all labor, supervision, equipment, appliances and materials and performing all operations in connection with cleaning and pre and post television inspection of the sanitary sewer lines, including the removal and disposal of debris; generating a DVD of the inspection files; and providing the required viewing software, all as directed by the City, complete in place and accepted, in accordance with the Drawings and Specifications.

3.07.03 - Construction Methods:

Submittals

A) The Contractor shall submit literature of the viewing software he proposes to use and it's compatibility to the City's DVD system.

B) A copy of the user defect codes as suggested in these specifications.

C) Literature on the television and cleaning and recording equipment showing compliance with these specifications.

Data Acquisition And Management

A) General

1) The CONTRACTOR shall submit to the CITY, at the completion of the project, MPEG files of the entire lengths of each pipeline inspected using closed circuit television. In addition, a complete database of the inspection information noting defects, infiltration/inflow quantification, roots, footages, subsystem and manhole segment and all other pertinent customary information, and appropriate viewing software shall be submitted in CD format. The database shall be in a format common to the industry that can be read using Microsoft Access or other software as directed by the City. Each DVD and CD shall be labeled with the appropriate identification of its contents. The label shall correspond to a schedule of every sewer reach contained on the DVD. The labeling information for the CD shall be in a format deemed acceptable by the CITY.

2) The digital video files shall be indexed to software capable of performing multiple summaries, queries, filtering, and analysis. The software shall also have the capability of capturing, digitizing, storing, and correlating single frames of video images, real time live video recording, the capability of collecting, storing, filtering, and presenting pipeline inspection data for computer display and printed report generation. Acceptable complimentary software packages are as provided by Severn Trent Services, Cues, Cobra Technologies or approved equal.

3) The viewing software package shall be compatible with a 32 bit Windows 98/NT/2000/XP operating system with data entry accomplished via a mouse or keyboard. It shall be capable of printing pipeline inspection reports and reports with captured images of defects or other related

significant visual information on a standard inkjet color printer. The software shall also have the capability of being linked with graphical software such as those used for Geographical Information Systems.

4) The manufacturer of the viewer software package shall have full in-house customer support.

B) Features

1) Data Base

a) Inspection files shall be exportable into other databases and other computers. Export file header format information shall be provided to allow the export file to be customized with applicable header information into unique user applications or software. A standard exchange format shall be used. DXF shall be sewer.dat as published by WRC (Water Research Council).

b) User selectable defect codes shall include standard defect codes, as suggested by the National Association of Sewer Service Companies (NASSCO) and the Pipe Rehabilitation Council (PRC), and user defined codes. There shall also be user selectable defect severity methods and category codes. Codes shall be approved by City prior to commencement of any work.

c) All graphic and tabular reports shall be available in color to match the defect severity and/or category codes. There shall be graphic and tabular reports, including a graphic of each pipe showing all observation points and pertinent data in an intuitive format. The system shall have the capability of customizing report formats using a search and sort function to sort by job, contract, pipe type, location, size, defect severity, etc.. to meet local area requirements and regulations as necessary.

2) Video Capture

a) Full length live video and audio files shall be captured for each pipe inspected. The files shall be stored in industry standard MPEG (Moving Pictures Expert Group) format and can be transferable by DVD to an external personal computer that supports MPEG 1 playback or played on a standalone DVD player. The minimum MPEG video shall be defined as ISO-MPEG Level 1 (not less than 1.5 Mbytes/sec). It may be necessary that conditions may require increased resolution as pipe sizes are increased in order to provide a quality video.

b) The video recording shall be free of electrical interference and shall produce a clear and stable image. The audio recording shall be sufficiently free of background and electrical noise as to produce an oral report that is clear and discernable. The MPEG compression hardware must be capable of pausing the image during an inspection.

c) The MPEG files and inspection data shall be linked by elapsed time to allow instant access to any defect during playback of video file.

d) The inspection header file shall include segment information (start and ending manholes, date, time, client, address, etc.). An index field shall be provided for each pipe segment in the database to the corresponding video file. The Primary Index Field (PLR in WRC) shall be used to name the video file with an extension of .mpg. No proprietary extension file names are permitted.

C) DVD Player Viewing Software

1) A DVD player viewing software package shall be provided with the database to facilitate playback of each pipe segment when requested from the database software. It is understood that the PC or laptop running the system will need to be capable of playing DVD's using other (not supplied) software and hardware before attempting to use the supplied player software viewing package.

2) This player software package will support searches (fast forward, fast reverse at 3 speeds) and still image capture.

D) Image Capture

1) The viewing system shall have the ability to create still pictures from user selected frames of video recordings. Selected digitized picture images shall be stored and the picture files shall be exportable to Industry Standard Formats to include JPEG, BMP and TIFF formats.

2) The selected digitized picture images shall be transferable to, and usable with, an external personal computer that utilizes standard viewers and printers.

3) Digitized picture files shall be linked to pipe segment observations within the database software. The system shall be capable of linking up to 2 digitized picture files for each observation.

4) It is understood that Image capture capability is hardware dependent and not all graphics boards support image capture from DVD playback. Consequently, it will be the CITY'S responsibility to resolve hardware incompatibilities, if necessary, using suggestions of proven compatible hardware provided by the CONTRACTOR.

5) The MPEG 1 files shall be able to be played on a Windows Media Player.

6) All MPEG files shall contain both video and audio content.

Execution

A) General

1) The Contractor shall include the complete removal and disposal of all dirt, roots, gravel and other debris and obstructions from the sewers. Special precautions must be exercised during the

cleaning operation to assure complete removal of roots from the joint area of pipes. All joints shall be fully exposed to allow proper television inspection.

2) Televising of sanitary sewer lines shall be defined as color television inspection by the insertion of a closed circuit television camera into a sanitary sewer line for the purpose of visual inspection of the interior portion of the sewer line. It shall be the Contractor's responsibility to provide for sewer flow control and the televising and recording of visual observations of the sewer line.

3) The sanitary sewer shall be cleaned prior to television inspection.

4) Prior to televising, all flow in the section of pipe to be televised shall be by-passed. If the section is a main interceptor where by-passing of all flow is not practical, flows up to 20% of the pipe diameter may be allowed during televising. The contractor may be requested to televise during the evening hours if flows cannot be by-passed.

5) The Contractor shall be responsible to pay for all water permits and water usage in excess of the Municipal Ordinance or Water Company allowance. The contractor is responsible to coordinate water usage and location with the Water Company and comply with all the requirements for accessing hydrants.

6) The Contractor shall generate MPEG 1 files in the field using a hardware video compressor. Alternatively the contractor may post process the video collected on super VHS format and transfer the video tapes to MPEG 1 files. However, the video files must be linked to the inspection data to permit random access to the video files using the inspection data. The Contractor will be allowed to use VHS tapes during the working period but must provide the Municipality with television records on DVD with applicable viewing software and database at completion of the project.

Workmanship

A) The designated sanitary sewer sections shall be cleaned using mechanically powered, hydraulically propelled or high velocity sewer cleaning equipment, as specified. Selection of the equipment used shall be based on the conditions of the lines at the time the work commences. The equipment and the methods selected shall be satisfactory to the City's representative. The equipment selected for cleaning shall be capable of removing dirt, rocks, sand, and other deleterious materials and obstructions from the sewer lines and manholes. Where possible, sewer lines should be cleaned from the downstream manhole. If cleaning of an entire section cannot be successfully performed from the manhole, the equipment shall be re-setup on the other end and cleaning again attempted. If, again, successful cleaning cannot be performed or the equipment fails to traverse the entire section, the Engineer may assume that a major blockage exists and the cleaning effort is to be abandoned.

B) All sludge, dirt, sand, rocks, grease and other solid or semi-solid material resulting from the cleaning operation must be collected and removed at the downstream manhole of the section being cleaned. Under no circumstances shall debris be allowed to flow into the downstream section.

C) During all sewer cleaning operations, satisfactory precautions shall be taken to protect the sewer line from damage that might be inflicted by the improper use of cleaning equipment. Any damage occurring due to the Contractor's operations, as determined by the City, shall be repaired to the satisfaction of and at the expense of the Contractor.

D) Acceptance of this portion of the work shall be made upon the successful completion of the television inspection and shall be to the satisfaction of the City. Where sags in the pipe are encountered to greater than 25% of the pipe size the pipe shall be re-cleaned, dewatered using a high velocity jet and re-televised.

E) Cleaning shall be accomplished no more than 24 hours prior to TV inspection with mechanical and/or hydraulic equipment except where Asbestos Cement Pipe is encountered, in which instance mechanical cleaning will not be allowed unless the City so directs. Mechanical equipment shall consist of rodding and bucketing machines with buckets, brushes, scrapers, and root cutters. Hydraulic equipment shall consist of high velocity type or hydraulically propelled equipment. Selection of equipment used shall be based on the condition of the line at the time of the work commencement and shall be capable of removing dirt, grease, rocks, sand and other debris, materials and obstructions.

F) Any damage resulting from the Contractor's operation, as determined by the City, shall be repaired or rectified to the satisfaction of, and at no additional cost to the City. When water from hydrants is necessary, the Contractor shall arrange and pay for all water used with the Water Company.

Television Inspection

A) The camera shall be moved through the line in either direction at a uniform rate to monitor for defects in the sanitary sewer line where water infiltrates, stopping when necessary to insure proper documentation of the sewer's condition, but in no case will the television camera be pulled at a speed greater than 30 feet per minute. The operator shall determine whether each flow source is attributable to a service in use or infiltration with an estimate made on the audio portion of the tape. Whenever possible, the camera shall be stopped at each joint for 3-5 seconds so viewing for joint infiltration may be performed. The television camera shall also be stopped at each lateral connection and at the beginning, terminating and any subsequent encountered manholes and with the use of the pan and tilt feature to view each structure for condition status. The recording speed shall be no greater than "SP" or 120 minutes using a T-120 tape cartridge if utilizing taping with transference to DVD at completion of the project. Manual winches, power winches, TV cable and powered rewinds or other devices that do not obstruct the camera view or interfere with proper documentation of the sewer conditions shall be used to move the camera through the sewer line. If, during the inspection operation the television camera will not pass through the entire sewer section, the Contractor shall reset up his/her equipment in a manner so that the inspection can be performed from the opposite end. If again, the camera fails to pass through the entire sewer section, the inspection shall be considered complete and no additional inspection work will be required, as directed by the City.

B) The accuracy of measurements cannot be stressed too strongly. Measurement for locations of defects shall be above ground by means of a meter device. Marking on cable, or the like, which

would require interpolation for depth of manhole, will not be allowed. Measurement meters will be accurate to two tenths (0.2) of a foot over the length of the section being inspected. Accuracy of the measurement meters shall be checked daily by use of a walking meter, roll-a-tape or other suitable device.

C) Documentation of Television Inspection Results Shall Be As Follows:

1) Television Inspection Logs: Printed location records shall be kept by the Contractor and will contain the video tape/DVD ID and MPEG file name, City's name, date TV inspection is performed, performing contractor's name, street name, drainage basin and manhole numbers for the segment televised, pipe shape, pipe size denoted be height and width, pipe material, joint spacing length, viewing direction, total televised length, measured flow in gpd, video start and finish index, and observations with clock reference. Each infiltration source noted shall be quantified in gpm. In addition, other points of significance, such as locations of building laterals, unusual conditions, roots, storm sewer connections, collapsed sections, presence of scale and corrosion, open joints, lateral and longitudinal cracks and other discernable features will be recorded and a copy of such records will be supplied to the City.

2) Photographs: Standard size (3-1/2 x 5) photographs of the television monitor noting problem areas shall be taken by the Contractor upon request of the City's Representative.

3) Video Recordings: The purpose of video recordings shall be to supply a visual and audio record of problem areas of the lines that may be replayed and viewed. Video recording playback shall be at the same speed that it was recorded. Following the completion of TV inspection, the Contractor shall provide the City with TV inspection videos with recommendations, for approval by the City.

4) All televising of sewer lines shall be done in the presence of the City’s authorized representative.

<u>Sewer Cleaning Equipment</u>

A) General

1) Cleaning shall be accomplished with mechanical and/or hydraulic equipment. Mechanical equipment shall consist of rodding and bucketing machines with buckets, brushes and scrapers, and root cutters. Hydraulic equipment shall consist of high velocity type or hydraulically propelled equipment. All equipment, machinery, trucks and vehicles used in the performance of cleaning and televising of sanitary sewer lines shall, at all times, be in proper operating condition. If equipment and other applicable machinery used in the cleaning and televising work are not in good working condition, as practiced by good sewer construction practices and the Contractor refuses to comply with these standards, the City may request the Contractor to fulfill the contract requirements with another suitable subcontractor and within the time frame allotted.

B) Hydraulically Propelled Cleaning Equipment

1) The equipment shall be equal diameter as the pipe being cleaned and provide a flexible scraper around the outer periphery to ensure total cleaning.

C) High velocity Hydro-Cleaning Equipment

1) All high velocity sewer cleaning equipment shall be constructed for ease and safety of operation. The equipment shall have a selection of two or more high velocity nozzles. The nozzles shall be capable of producing a scouring action from 15 to 45 degrees in all size lines designated to be cleaned. The equipment shall carry its own water tank, auxiliary engines, pumps, and hydraulically driven hose reel. All controls shall be located so that the equipment can be operated above ground.

2) It is the Contractor's responsibility to supply the water necessary to perform the work from a source approved by the City. The Contractor shall be required to obtain formal authorization from the local water company when the supply of water is from fire hydrants. Water supplied from fire hydrants or other sources shall be at the expense of the Contractor. The Contractor shall be required to make good any damages resulting from the improper use of the water supply system. No fire hydrant shall be obstructed in case of a fire in the area served by the hydrant nor shall a hydrant be used for the purpose described unless a vacuum break is provided.

D) Mechanical Cleaning Equipment

1) Mechanical equipment shall consist of rodding and bucketing machines with buckets, brushes and scrappers and root cutters.

<u>Television Inspection Equipment</u>

A) Mobile Unit

1) The television system shall be a self-contained system complete with winches (power and mechanical), cable, closed circuit television camera, monitor, super VHS video tape and MPEG1 Hardware Compressor, camera, suitable measuring device to accurately determine the position of the camera in the line being televised at all times, and all necessary equipment for he successful completion of television inspection.

B) Video Equipment

1) The color television camera used for the inspection shall be a radial view camera (360-degree optical lens) specifically designed and constructed for such inspection. The camera must be solid-state color and have remote control of the 360-degree rotational lens. Cameras incorporating mirrors for viewing sides or cameras using exposed rotating heads are not acceptable. Lighting for the camera shall be suitable to allow a clear picture for the entire periphery of the pipe. The camera shall be operative in 100% humidity conditions. The camera, television monitor and other components of the video system shall be capable of producing a minimum 460-line resolution video picture. Picture quality and definition shall be to the

satisfaction of the City and if unsatisfactory, equipment shall be removed and no payment made for unsatisfactory inspection.

3.07.04 - Method Of Measurement: Pipeline cleaning and video inspection will be measured for payment by the actual number of linear feet of pipeline cleaned and investigated by closed-circuit television with digital recording regardless of size, type and/or location of the pipeline.

3.07.05 – Basis of Payment: Pipeline cleaning and video inspection will be paid for at the contract unit price per linear foot for "Pipeline Cleaning And Video Inspection" complete as specified, including sewer flow control, video tape, records and all material, equipment, tools, labor, mobilization and demobilization and work incidental to or necessary for the completion of the item.

No separate payment will be made for cleaning and inspection (including TV inspection) for sewer lines constructed under this contract failing to pass infiltration/exfiltration requirements.

If no item "Pipeline Cleaning And Video Inspection" appears in the Bid Proposal, the cost of such work will be considered to be included in the prices bid for other items of work.

No separate payment will be made for Pipeline Cleaning And Video Inspection for sewer lines constructed under this contract as payment for that work is included in the unit price for the new pipeline.

No separate payment will be made for Pipeline Cleaning And Video Inspection for sewer lines constructed under this contract that are immediately placed in service because of replacement of an existing line or the tie-in of existing laterals.

Pay Item	Pay Unit
Pipeline Cleaning And Video Inspection	LF

SECTION 3.08
SEWER FLOW CONTROL

3.08.01 – Description: The work covered by this Section the Specifications consists of furnishing all labor, supervision, equipment, appliances and materials and performing all operations in connection with control and maintenance of sewage flow during inspection, rehabilitation, and/or installation of sewers.

3.08.02 – Construction Methods: When sewer line flows at the upstream manhole of the manhole section being worked are above the maximum allowable requirements, the flows shall be reduced to the maximum line flow level allowed by manual operation of pump stations, or by pumping/bypassing of the flows, so as to allow required work to be performed, as specified.

The Contractor's intended methods for diversion and control of sewer system flows shall be submitted for approval to the City prior to starting the work. It is expressly understood and agreed that any approvals given by the City shall not relieve the Contractor of full responsibility for any injury or damage resulting from the Contractor's operations or for complying with all regulations or requirements of State or Local authorities.

It shall be the responsibility of the Contractor to make provisions to meet all requirements of these specifications and to correct any problems that may arise, as a result of pumping and bypassing operations.

Standing water in manholes shall be pumped out when necessary to perform the scheduled alterations, and as directed by the City.

Under no circumstances will the Contractor be allowed to discharge temporary bypasses containing untreated sewage to the following:

1. Storm Drains
2. Directly into City streets or thoroughfares
3. Surface Waters (directly or by runoff)
4. Anywhere other than the sanitary sewer

<u>Equipment</u>

A. The sewer lines in the designated areas shall be pumped down using pumps designed to handle raw sewage without clogging and of sufficient size and durability to pump the expected flows continuously.

B. If pumping is required on a 24-hour basis, all engines shall be equipped in a manner to keep the pump noise at a minimum.

C. The Contractor also shall provide 100 percent backup for his/her system in the event of equipment failure.

General

A. Plugging or Blocking: When line plugging is required, a sewer line plug shall be inserted into the line at a manhole upstream from the section in which work is to be performed. The plug shall be so designed that all or any portion of the sewage flows can be released. During the work, flows shall be shutoff or reduced to within the maximum flow limits as needed and described in B. After the work tasks have been completed, flows shall be restored to normal.

B. Pumping and Bypassing: When pumping/bypassing is required, the Contractor shall supply the necessary pumps, conduits, and other equipment to divert the flow of sewage around the manhole section in which work is to be performed. The bypass system shall be of sufficient capacity to handle existing flows plus additional flow that may occur during periods of a rain storm, including infiltration and inflow. The Contractor will be responsible for furnishing the necessary labor and supervision to set up and operate the pumping and bypassing system.

C. Pumping and Bypassing – Verification: The Contractor shall be solely responsible for positively verifying that the facility receiving sanitary sewer bypass flows is a sanitary sewer facility (e.g. a sanitary sewer main). If possible, verification shall be achieved by direct observation. Examples of appropriate methods of direct observation include establishing physical connectivity, (e.g. a cable or other physical device extended from the bypass manhole to receiving manhole,) and dye testing from the bypass manhole to the receiving manhole. Where verification by direct observation is not possible, the Contractor shall use whatever means are necessary to achieve positive verification. Regardless of the field means used to achieve positive verification, the Contractor is required to review the pertinent sanitary sewer and storm drainage information at the Offices of the CITY, and to have on-site at the location of any bypass copies of the detailed maps (scale 1” = 40’) of the pertinent sanitary sewer and storm drainage facilities available at the same Offices of the CITY. The Contractor is also responsible to verify that the receiving sanitary sewer facility has ample capacity to collect and transport the additional flows received via the bypass. The Contractor shall comply with the notification requirements as set forth in Paragraph D set forth below.

D. Pumping and Bypassing – Inspection: Pumping and bypassing of sanitary sewage flows is subject to inspection as stated in the General Conditions and/or as supplemented. The Contractor shall verbally notify the Engineer at least 1 hour prior to, and not greater than 4 working hours prior to, attempting a direct observation verification as set forth in Paragraph C above, or if direct observation is not possible, prior to commencing bypassing of flows, to allow for inspection of the same. Verbal notification shall mean a personal conversation with the Engineer, Inspector, or designated representative thereof; i.e. the leaving of a voicemail message does not constitute verbal notification. As with all other aspects of project work, the observation, review, and/or presence of the Inspector with respect to pumping and bypassing does not relieve the Contractor in any way of any responsibilities or requirements as set forth in the Contract Documents. In the instance of circumstances the Engineer deems as appropriate, and solely at the discretion of the Engineer, the Engineer may require the written submittal of a bypass plan up to 14 days prior to the commencement of a particular bypass. The specific requirements of a required plan will be given to the Contractor at the time the request for a plan is made. As a minimum, the plan will be required to contain 1) an itemized list of the proposed bypass facilities, 2) a description of the proposed means of verification of appropriate receiving facility, and 3) a map or sketch depicting the proposed

bypass facilities in relation to street improvements, buildings, driveways, sidewalks, storm drains, and any other facilities or physical features which may be pertinent to and/or affected by the proposed bypass. The approval of any bypass plan by the Engineer represents solely an approval of the approach to the bypass, and related activities, depicted by the plan; it does not represent approval of any or all of the facilities, means, or methods, or the design or engineering thereof, proposed by the plan.

Maintaining Flows During The Pipe Installation And/Or Rehabilitation Operation

A. During the installation and/or rehabilitation of sections of the sewer system, it is required that the Contractor maintain sewage flows in the system and from all abutting properties at all times. No sanitary service shall be interrupted by the Contractor except as absolutely necessary and then for only very short periods of time of no more than thirty (30) minutes and then only when coordinated with the affected property City. Except during lining operations where interruption at the street tie-in will be allowed for up to twenty-four (24) hours, when coordinated with the affected property City.

B. The Contractor shall notify all property Citys who discharge sewage directly to the sewer being lined or replaced, that their service will be discontinued while the line is being replaced, or the CIPP is being inserted, cured and active service connections reopened. The Contractor shall notify, individual property Citys at least 48 hours in advance, giving the date, start time and estimated completion time for the work being conducted.

Flow Control Precautions

Whenever flows in a sewer line are blocked, plugged or bypassed, sufficient precautions must be taken to protect the sewer lines from damage that might be inflicted by excessive sewer surcharging. Further, precautions must be taken to ensure that sewer flow control operations do not cause flooding or damage to public or private property being served by the sewers involved. The Contractor will be held liable for any damage resultant of his/her flow control operation and will be responsible to repair, replace or otherwise rectify said damage immediately to the satisfaction of the City.

3.08.04/.05 – Method of Measurement and Basis of Payment: The cost of this work will not be measured or paid separately but shall be considered to be included in the prices bid for other items.

SECTION 3.09
SEWER LINE PRESSURE TESTING AND SEALING

3.09.01 – Description: The work covered by this Section of the Specifications consists of furnishing all labor, supervision, equipment, appliances and materials and performing all operations in connection with pressure testing and joint sealing of sewers and the first 6 feet of building laterals, and as directed by the City, complete in place and accepted, in accordance with the Drawings and Specifications.

The work and materials required in this Section of the Specifications generally consists of the following:

1. Flow control, including bypassing, and root removal (if required), cleaning of sewers, and television inspection shall be conducted, as specified, prior to pressure testing and joint sealing of sanitary sewers.

2. Manhole reaches for sewer sections to be pressure tested and sealed shall be televised before and after sealing with results recorded using a form, an example of which is available from the NBDPW, and kept in a logbook.

3. Building laterals to be pressure tested and sealed shall be televised before and after sealing with results kept in a logbook.

4. A notification form should be given to each building for which laterals have been grouted. This notification to the occupant should state that the lateral servicing the particular address was grouted on the particular date and if blockage occurs, the occupant should call a given phone number of the Contractor.

5. Where the contractor chooses to use grouting as a means of reducing infiltration/ inflow prior to lining a sewer pipe, the pressure testing phase and warranty section of the specification shall not apply. The intent shall be to seal and eliminate only the active leaks so that resin loss will not be a factor in the lining process.

3.09.02 - Materials: Shop drawings, a list of materials, and technical data shall be submitted to the City for approval prior to any work being performed under this Section of the Specifications.

<u>Design Criteria</u>

A. It is the intent of this portion of the work to provide for the sealing/repair of sewer line joints, utilizing the internal joint sealing method. It is realized that this method may only be used on sewer pipe sections in good physical condition. Where non-visible bell cracks or chips are evident from pipe section offset, sealing may be undertaken where the offset is small enough to allow proper seating of the sealing packer on both sections of pipe.

B. It is intended that no rehabilitation by chemical grouting shall be performed on any sanitary sewer line that has been scheduled for point repair, replacement, manhole rehabilitation, or other work involving excavation or new connections, until the scheduled work has been completed, or as otherwise authorized by the City.

C. The City intends to provide full-time resident inspection during sealing operations. Therefore, the Contractor shall provide CCTV testing-grouting rigs plus all necessary support equipment and personnel for full-time operation.

D. The Contractor shall provide an experienced Chief Operator for each of the CCTV testing-grouting rigs. The Chief Operator shall have a minimum of six (6) months active experience as Chief Operator of similar T.V. grouting rigs.

Sewer Cleaning And Television Inspection Equipment

A. Cleaning and Television Inspection Equipment used in performing pressure testing and joint sealing shall be as designated in Section 3.07 – "Pipeline Cleaning and Video Inspection".

Pressure Testing Equipment

A. The basic equipment used shall consist of a television camera, joint testing device (such as a low void packer), and test monitoring equipment. The equipment shall be constructed in such a way as to provide means for introducing a test medium, under pressure, into the VOID area created by the expanded ends of the joint-testing device and a means for continuously measuring the actual static pressure of the test medium within the VOID area. A fluid (liquid or gas) shall be used as the test medium. Both liquid (usually water) and air are acceptable, but the test procedure is different for each.

B. VOID pressure data shall be transmitted electrically and without the use of the test medium (water) or hoses. All test monitoring shall be above ground and in a location that allows for simultaneous, continued observation of the television monitor and test monitoring equipment by the City's representative.

C. The Contractor shall supply a test cell in order to ensure accuracy of the testing equipment.

Joint Sealing Equipment

A. The basic equipment shall consist of a closed circuit television system, necessary chemical sealant containers, pumps, regulators, valves, hoses, etc., and LOW VOID joint sealing packers for the various sizes of sewer pipes. The packer shall be a cylindrical case of a size less than pipe size, with the cables at either end used to pull it through the line. The packer device shall be constructed in such a manner as to allow a restricted amount of sewage to flow at all times. Generally, the equipment shall be capable of performing the specified operations in lines where flows do not exceed the normal maximum line flows. When the packer is inflated, two (2) wide spaced annular bladders shall be formed, each having an elongated shape and producing an annular void around the center portion of the packer. The packer shall be equipped with a lateral sealing inversion tube for testing and sealing of the building laterals.

Joint Sealing Materials

A. Chemical Grout Sealant

1. The chemical grouting material shall be a liquid that can be easily transported to the pipe joint and injected into the joint. The grout shall react quickly to seal the joint against infiltrating groundwater and shall be capable of withstanding the environment within the sewer or drain system and normal maintenance operations. The chemical grout shall provide a seal that will withstand a water or air pressure test of four pounds per square inch (4 psi) above the hydrostatic pressure for a minimum of thirty (30) seconds.

2. The Contractor shall use an appropriate root inhibitor mixed with the grout as recommended by the manufacturer; such as Barrier 50W as manufactured by Avanti International, or approved equal.

3. The seal effectiveness of the grout may not be required to be demonstrated by laboratory testing in a soil box on standard pipe of various configurations, if acceptable testing documentation is supplied to and approved by the City. Otherwise, the test will be an exfiltration test performed at a ten (10) foot head of water on a single joint, grout with a standard packing device. Under the following criteria, the test results must meet the specification relating to an acceptable seal for a new pipe.

a. Soil Box - A box of such dimensions as to contain a standard 8-inch concrete joint (bell and spigot area) and approximately one yard of soil. One end must allow protrusion of the pipe so that the standpipe can be affixed. The bell end of pipe must be strapped securely to the box and the box designed with a sliding panel so that the spigot end can be flexed.

b. Pipe Failure Configuration - The following configurations used in the Western Report (Improved Sealants for Infiltration Control, The Western Company, June, 1969) shall each be tested.

i) Open Joint - ⅛" open gap from dead tight joint.

ii) Broken Bell - Approximately 1/3 of the bell is broken away.

iii) Slot - 3" x ⅛" slot in barrel of pipe.

c. Flexure Test - The open joint configuration shall be subjected to a deflection of at least 0.3 inch per foot of pipe without causing failure of the seal. (This corresponds to 20% of the possible deflection before breakage of the bell.).

d. Soils - All tests will be performed in two soils:

i) Sand (particle size greater than 0.05mm)

ii) Clay (at least 30% of soil with particle size less than 0.02 mm)

e. In lieu of laboratory tests, the grout manufacturer may submit other proof that the sealant used meets the above requirements.

f. The grouting material shall be an acrylamide gel, AV-100 as manufactured by Avanti International, urethane gel 5610 as manufactured by 3-M or an approved equal. The Contractor shall receive the City's approval prior to using any grouting material.

B. All chemical sealing materials used in the performance of the work specified must conform to the following minimum performance standards:

1. While being injected, the chemical grout must be able to react in moving water.

2. The final cured grout must be capable of withstanding submergence in water without degradation.

3. The resultant grout formation must be impervious to water penetration.

4. The grout material, after fully curing, must be flexible, not brittle or rigid.

5. The final grout should be able to withstand freeze-thaw and wet-dry cycles without causing adverse changes to the grout.

6. The final grout formation must not be biodegradable.

7. The cured grout should be chemically stable and resistant to concentrations of acids, alkalis, and organics found in normal sewage.

8. The chemical grout sealing effectiveness shall meet or exceed that stated in "Chemical Sealants for Elimination of I/I", page 23, published by the U.S.E.P.A., September 28, 1973.

C. All chemical sealing materials used shall meet the following minimum application requirements.

1. All component materials should be easily transportable by common carriers.

2. Packaging of component materials should be compatible with field storage requirements.

3. Grout components must be packaged in such a fashion as to provide for maximum worker safety when handling the materials and minimize spillage when preparing for use.

4. Mixing of the components should be compatible with field applications and not require precise measurements.

5. Catalyzation shall take place at the point of injection/repair.

6. Cleanup must be done without inordinate use of flammable or hazardous chemicals.

7. Materials must be capable of being pumped through a minimum of 500 feet of ½ inch to ¾ inch diameter hose.

8. Residual sealing materials must be removable from the sewer after injection to ensure no flow reduction, restriction or blockage of normal sewer flows.

D. Acrylamide Base Gel sealing materials shall have the following basic properties:

1. A controllable reaction time ranging from ten (10) seconds to greater than one (1) hour.

2. Viscosity that can be made near two (2) centipoise or greater.

3. Viscosity to remain constant throughout the induction period.

4. The ability to tolerate some dilution and react in moving water.

5. The final reaction shall produce a homogeneous chemically stable, non-biodegradable, firm, flexible gel.

6. The gel shall not be rigid or brittle.

7. The gel shall have a negligible corrosion rate on mild steel plates.

8. The base compounds may be varied considerably by additives to increase the strength, adhesion, solution density and viscosity.

9. The gel shall be prepared from a minimum of ten percent (10%) (by weight) aqueous solution of the basic chemicals. The activator and initiator catalysts shall be introduced in such proportions, as recommended by the manufacturer, as to produce the most effective gel time for the existing field conditions and temperatures.

10. Proportion control tests shall be made daily to determine that the proper amount of catalysts and additives are being used for the prevailing conditions. The concentration of the initiator (ammonium persulfate) shall be less than three percent (3%) by weight.

E. Urethane Base Gel sealing materials shall have the following basic properties:

1. 1 Part urethane prepolymer thoroughly mixed with between 5 and 10 parts of water weight. The recommended mix ratio is 1 part urethane prepolymer to 8 parts of water (11% prepolymer).

2. A liquid prepolymer having a solids content of 77% to 83%, specific gravity of 1.04 (8.65 pounds per gallon), and a flash point of 20° F

3. A liquid prepolymer having a viscosity of 600 to 1200 centipoise at 70°F than can be pumped through 500 feet of ½-inch hose with a 1000 psi head at a flow rate of 1 ounce per second.

4. The water used to react the prepolymer should have a pH of 5 to 9.

5. A cure time of 80 seconds at 40°F, 55 seconds at 60°F, and 30 seconds at 80°F when 1 part prepolymer is reacted with 8 parts of water only.

6. A cure time that can be reduced to 10 seconds for water temperatures of 40°F to 80°F when 1 part prepolymer is reacted with 8 parts of water containing a sufficient amount of gel control agent additive.

7. A relatively rapid viscosity increase of the prepolymer/water mix. Viscosity increases from about 10 to 60 centipoise in the first minute for 1 to 8 prepolymer ratio at 50°F.

8. A reaction (curing) which produces a chemically stable and non-biodegradble, tough, flexible gel.

9. The ability to increase mix viscosity, density, gel strength and resistance to shrinkage by the use of additives to the water.

F. None of the materials in the grouting system shall present undue hazard to job site personnel, the general public, or the environment. Material Safety Data Sheets (Form OSHA-20 or equivalent) shall be made available for each material outlining proper fire and explosion hazard data, health hazard data, spill and leak procedures, and special protective equipment information.

G. Proper procedures for waste disposal of all residues of each material in the grouting system shall be used. Manufacturers' recommendations shall be strictly adhered to. Disposal shall be made at a sanitary landfill site or other applicable disposal site. Neither the grout nor its component materials shall be disposed of in the sewer drain system.

H. All equipment and the surrounding area shall be cleaned up properly and completely. The method of cleaning equipment shall be based on the manufacturer's recommendations.

I. The chemical sealing materials used shall have a minimum of five (5) years documented "in place" successful use in the sealing of sewer line joints.

At the request of the City, proof of such documentation will be provided by the Contractor. If such documentation is inadequate or unsatisfactory to the City, the material shall not be al-lowed for use on this project unless verified by the soil box test and approved by the City.

J. An additive to increase the compressive and tensile strength as well as elongative properties shall be added to the grout mix. If an acrylamide gel is used then AV-257 as manufactured by Avanti International is acceptable or if a urethane gel is used an acceptable additive is 5612 as manufactured by 3-M. Mixing ratios shall be a minimum of 4 gallons in lieu of water per 30 gallon mix if

acrylamide and 4 gallons in lieu of water per 40 gallon mix if urethane. The grout shall be mixed as defined by the Manufacture.

3.09.03 - Construction Methods:

Cleaning And Television Inspection Of Sewers

A. All lines that are scheduled for grouting shall be cleaned. Cleaning shall include the complete removal of all dirt, rocks, roots, gravel and other debris and obstructions from the sewers. Pipeline Cleaning And Video Inspection shall be performance in accordance with Section 3.07 - Pipeline Cleaning And Video Inspection.

Pressure Testing

A. The technique of sewer line joint testing is used to test the integrity of individual pipe joints. Testing cannot be performed and will not be required on cracked or broken pipe, or sections of the pipe between joints. Testing also will not be required on visibly leaking joints. Joints with visible infiltration shall be sealed immediately.

B. Joint test pressure shall be 4 psi higher than the groundwater pressure, if any, outside the pipe. Groundwater pressure may be determined by positioning the testing device on a visibly infiltrating joint and measuring the resulting VOID pressure with the VOID pressure monitoring equipment.

In the absence of groundwater pressure data, the test pressure shall be equal to ½ psi per vertical foot of pipe depth or 4 psi, whichever is greater. In no case, however, shall a pressure exceed 10 psi.

C. Prior to starting the joint testing phase of the work, a two-part Control Test shall be performed, as follows:

1. To insure the accuracy, integrity and performance capabilities of the testing equipment, a demonstration test (also known as a barrel test) will be performed in a test cylinder above ground. This test shall be performed at the beginning of the job, when equipment is changed, on a weekly basis, and as designated by the City. The test cylinder shall be constructed in such a manner that a minimum of two known leak sizes can be simulated. This technique will establish the test equipment performance capability in relationship to the test criteria and insure that there is no leakage of the test medium (water) from the system or other equipment defects that could affect the joint testing results. If this test cannot be performed successfully, the Contractor shall be instructed to repair or otherwise modify his/her equipment and re-perform the test until the results are satisfactory to the City. This test may be required at any other time during the joint testing program if the City suspects the testing equipment is not functioning properly.

2. After entering each manhole section with the test equipment, but prior to the commencement of joint testing, the test equipment shall be positioned on a section of sound sewer pipe between pipe joints, and a test performed as specified. This procedure will demonstrate the reality of the test requirement, as no joint will test in excess of the pipe

capability. If it is found that the barrel of the sewer pipe will not meet the joint test requirements, then the requirements will be modified to within the pipe integrity limits.

D. Each sewer pipe joint, which is not visibly leaking, shall be individually tested at the above-specified test pressure (not exceeding a test pressure of 10 psi) in accordance with one of the following procedures.

1. Liquid Test Procedure:

a. The testing device shall be positioned within the line in such a manner as to straddle the pipe joint to be tested.

b. The testing device end elements (sleeves) shall be expanded so as to isolate the joint from the remainder of the line and create a VOID area between the testing device and the pipe joint. The ends of the testing device shall be expanded against the pipe with sufficient inflation pressure to contain the test liquid within the VOID without leakage past the expanded ends.

c. Water or an equivalent liquid shall then be introduced into the VOID area until a pressure equal to but not greater than 2 pounds greater than the required test pressure is observed with the VOID pressure monitoring equipment. If the required test pressure cannot be developed (due to joint leakage), the joint will have failed the test and shall be sealed, as specified.

d. The flow rate of the test liquid shall then be regulated to a rate at which the VOID pressure is observed to be the required test pressure. A reading of the test liquid flow meter shall then be taken. If the flow rate exceeds ¼ gallon per minute (due to joint leakage), the joint will have failed the test and shall be sealed as specified.

e. The City may direct the Contractor to alter the testing pressure and/or alter the allowable pressure drop based on actual conditions encountered during grouting.

2. Air Test Procedure:

a. The testing device shall be positioned within the line in such a manner as to straddle the pipe joint to be tested.

b. The testing device end elements (sleeves) shall be expanded so as to isolate the joint from the remainder of the line and create a VOID area between the testing device and the pipe joint. The ends of the testing device shall be expanded against the pipe with sufficient inflation pressure to contain the air within the VOID without leakage past the expanded ends.

c. Air shall then be introduced into the VOID area until a pressure equal to or greater than the required test pressure is observed with the VOID Pressure monitoring equipment. If the required test pressure cannot be developed (due to joint leakage), the joint will have failed the test and shall be sealed as specified.

d. After VOID pressure is observed to be equal to or greater than the required test pressure, the airflow shall be stopped. If the VOID pressure decays by more than 2 psi within 15 seconds (due to joint leakage), the joint will have failed the test and shall be sealed as specified.

E. Air testing of all house lateral connections shall be accomplished by isolating the area to be tested with a grouting packer and a lateral sealing inversion tube, and applying positive pressure into the isolated void area up the lateral for at least six feet. A sensing unit shall be used for continuous monitoring of the void pressure. This sensing unit shall be located within the void and accurately (within 1/10 of a psig) transmit the pressure readout to the control panel.

The test procedure shall consist of applying air pressure into each isolated void area. To isolate a void, the lateral sealing packer is positioned straddling the lateral. The operator inflates the inversion tube up the lateral and then inflates the packer ends to isolate the lateral. A pressure of 5-psi air pressure is applied into the isolated void area.

The test is considered positive if the time for a drop of pressure from 5-psi to 3-psi exceeds 15 seconds. Otherwise, the lateral is considered to have failed the air test and shall be sealed. After completing the air test for each individual lateral, the lateral packer should be deflated, with the VOID pressure meter continuing to display VOID pressure. If the VOID pressure does not drop to approximately zero, the equipment is adjusted to provide a zero VOID pressure reading at the monitor.

Joint Sealing

A. Joints showing visible leakage, or joints that have failed the joint test, shall be sealed as specified. Joint sealing shall be accomplished by forcing chemical sealing materials into or through infiltration points by a system of pumps, hoses, and sealing packers. The amount of grout necessary for each joint shall conform to manufacturer's recommendations and to further requirements of this Section.

B. The packer shall be positioned over the area of infiltration by means of a metering device and the closed circuit television camera in the line. It is important that the procedure used by the Contractor for positioning the packer be accurate to avoid over pulling the packer and thus not effectively sealing/grouting the intended joint from infiltration.

C. The packer sleeves shall then be expanded using precisely controlled pressures. The pneumatically expanded sleeve or elements shall seal against the inside periphery of the pipe to form a void area at the point infiltration, now completely isolated from the remainder of the pipeline.

D. Into this isolated area, sealant materials shall be pumped through the hose system at controlled pressures that are in excess of groundwater pressures.

E. The pumping, metering, and packer device shall be integrated so that proportions and quantities of materials can be regulated in accordance with the type and size of the leak being sealed.

F. Lateral sealing is performed if the lateral does not pass the air test as described above. The lateral packer should remain in position, maintaining the isolated VOID. Chemical grout sealant is pressure injected through the lateral packer into the annular space between the inversion tube and the lateral pipe. Under pressure, the grout material is then forced out into the soil through leaking joints and pipe defects. A minimum of six (6) feet of the building lateral from the main sewer up into the lateral shall be sealed.

Joint Sealing Verification

A. Upon completing the sealing of each individual joint, the packer shall be deflated; with the void pressure meter reading zero (0) pressure, moved a minimum of two (2) inches, and repositioned over the grouted joints. The packer shall be re-inflated and the joint retested, as specified in Section 3.02 of this specification.

B. Should the VOID Pressure Meter not read zero (0), the Contractor shall be instructed to clean his/her equipment of residual grout material or make the necessary equipment repairs to provide for accurate Void Pressure reading.

C. Joints that fail to meet the specified test criteria shall be resealed and retested until the test criteria can be met in order to receive payment.

D. The sealed joint shall be televised to allow for visual inspection upon completion of the sealing operation.

E. The joint will not be considered sealed unless, while under continual pressure, a minimum of ¼ gallon per inch of pipe diameter has been applied, i.e., 2 gallons for 8" pipe or a pressure attained for a period of 30 seconds equal to 3 psi higher than the groundwater pressure, if any, outside the pipe or as determined in section 3.02 Pressure Testing not to exceed 10 psi. This is to insure that sufficient chemical has dispersed into the surrounding soil and that a temporary seal has not been made by applying a minimum amount of chemical to the joint area inside the pipe. Sealant shall be pumped “to resist”, sealant volume shall not exceed ½ gallon per inch diameter without authorization from the City’s representative. In soils containing large interstices, such as gravel or rock, especially in the presence of moving groundwater, the effectiveness of the acrylamide gel sealant may be reduced. This condition may be remedied by one of the following measures as recommended by the sealant manufacturer.

1. Judicious use of shorter gel time

2. Intermittent grouting

3. Use of higher gel concentration.

No testing or chemical grouting of pipe joints will be allowed in the City's absence with-out specified prior approval in each instance.

F. Lateral sealing verification is completed by performing air testing a second time. The air test is the same as defined above. The sequence of air testing, grouting and subsequent air testing is repeated until either the lateral is sealed or it is determined that the grout consumption is too high and may result in the blockage of the lateral pipe. The final determination to stop subsequent attempts to seal a lateral will be made by the City.

Residual Grout Material

A. Any residual sealing materials that extend into the pipe, reduce the pipe diameter, or restrict the flow shall be removed from the joint. The sealed joints shall be left reasonably "flush" in dimension with the existing pipe surface. If excess residual sealing materials accumulate in the line and/or as directed by the City, the entire line section shall be re-cleaned to remove excess material, at no expense to the City.

Records

A. Documentation of television inspection results shall be as follows:

1. Television Inspection Logs: Printed location records shall be kept by the Contractor and will clearly show the location, in relation to adjacent manholes, of each infiltration point discovered by the television camera. In addition, other points of significance such as locations of building sewer, unusual conditions, roots, storm sewer connections, collapsed sections, presence of scale and corrosion and other discernible features will be recorded and a copy of such records will be supplied to the City.

2. Photographs: Standard size photographs of the television monitor or problem areas shall be taken by the Contractor upon request of the City's Representative and at no cost to the City.

3. Video Tape Recordings: The purpose of tape recordings shall be to supply a visual and audio record of problem areas of the lines that may be replayed both daily and at future presentations. Video tape recording playback shall be at the same speed that it was recorded. Slow motion or stop motion playback features shall be supplied at the option of the City. Videotapes shall remain available to the City along with a viewing machine, for a period of up to thirty days following completion of all work by the Contractor. All videotapes shall become the property of the City. All tapes shall be compatible with VHS equipment.

B. During the joint testing program, complete records shall be kept, recording the location of the line section in which the testing is being done, the location of each joint tested, the test pressures used, flow rates of the test liquid and the test results. A specific statement shall be included to indicate if the referenced joint passed or failed the test and if the joint is to be sealed. An example of a “Sealing and Testing Report” form is available from the NBDPW.

C. Complete records shall be kept of all joint sealing performed in each line section certified and submitted to the City. The records will document the location of the line section in which the sealing was done, the location of each joint sealed, the amount of material used to seal the joint the

numbers of injections required to seal the joint and the joint test verification results. Two copies of the certified test results shall be submitted to the City for review and approval.

D. The complete procedure for sealing laterals should be videotaped during the air testing and sealing operation. The videotapes are to be submitted to the City for review and permanent record.

Inspection

A. The City intends to provide full-time resident inspection of all cleaning of sewers, television inspection, pressure testing and sealing operations. Therefore, work shall only be performed in the presence of a duly authorized representative of the City. This includes blending the various chemicals (set-up and tear down operations need not be performed in the presence of the City).

B. The City may direct the Contractor to alter testing pressure gel time, and/or pumping rate, based on actual conditions encountered during sealing.

C. The City may direct the operator to position the air-inflatable sleeves along a clean barrel of pipe to verify that the unit is holding pressure. Similarly, the City may direct the operator to position the air-inflatable sleeves on either side of a house connection to determine that air leakage is being properly recorded.

D. The City shall determine which joints pass and fail the pressure test based on compliance with these specifications. A daily log of work accomplished shall be duly recorded and acknowledged by the City and the Contractor's superintendent.

E. Video Inspection of each lateral grouted will be required immediately following the process to determine cleanliness before moving on to the next location.

Warranty

A. All sewer pipe joint sealing work performed shall be guaranteed against faulty workmanship and/or materials for a period of one year after the completion of work.

B. Prior to the expiration of the guarantee period, the City shall select an initial retest area consisting of specific manhole sections. The manhole sections to be retested shall be randomly selected throughout the project area and shall be representative of the majority of the sealing work originally performed. The initial test area shall consist of approximately 5% of the linear feet contained in the original project.

C. Within the initial retest area, the Contractor shall retest all previously sealed joints as previously specified. Any joints failing the retest shall be resealed. If the failure rate of the retested joints is less than 5% of the joints retested, the work shall be considered satisfactory and no further retesting will be required.

D. If, in the initial retest area, the failure rate of the retested joints exceeds 5% of the joints retested, an additional retest area of equivalent size shall be selected and all previously sealed joints shall be

retested. This additional testing and sealing, if necessary, will continue until a failure rate of less than 5% of the total joints retested is met. If a joint fails the initial retest, no additional payment shall be made.

E. Any additional testing/sealing required beyond the initial retest area shall be accomplished at no cost to the City. The initial re-testing shall be paid for under the unit bid item for pressure testing and sealing.

F. Should as much as 25% of the original project be re-tested and fail to meet the 5% requirement, the Contractor will be required to provide the same number of crews as utilized in the original project so that the re-testing will proceed at a more rapid rate.

Line Obstructions

A. It shall be the responsibility of the Contractor to clear the line of all obstructions such as solids, dropped joints, protruding service connections or collapsed pipe that will prevent the line from being grouted. As a general guide, if the camera or grouting equipment can not pass by the obstruction as determined by the City's Representative then the obstruction should be considered for repair or removal. If inspection reveals an obstruction that cannot be removed by conventional sewer cleaning equipment or a cutter, then the Installer shall make a point repair excavation to uncover and remove or repair the obstruction. Such excavation shall be approved in writing by the City's representative prior to the commencement of the work and shall be considered as a separate pay item under Section 02640 - Point Repairs to Sanitary Sewer Lines. Obstructions removed through cleaning or use of a cutter, such as protruding services, shall be considered to be included in the cost of grouting.

3.09.04 - Method Of Measurement:

1. Pressure testing and joint sealing of sanitary sewer will be measured for payment at the unit "linear feet" (L.F.) price for the actual number of linear feet for each category defined by pipe size and joint spacing tested and sealed, complete and accepted. Measurement for length shall be made from the center of manhole to the center of manhole.

2. Pressure testing and joint sealing of sanitary sewer building laterals will be measured for payment at the unit "each" (E.A.) price for the actual number of building laterals tested and sealed, complete and accepted.

3.09.05 – Basis of Payment:

1. Payment will be made for each linear foot of sewers tested and sealed for each category defined by pipe size and joint spacing, at the contract unit price, for the pipe sizes and joint spacings, listed in the bid. Payment shall constitute full compensation for furnishing all materials, labor, tools, equipment and appurtenances and maintenance of existing flows.

2. Payment will be made for each building lateral tested and sealed, at the contract unit price listed in the bid. Payment shall constitute full compensation for furnishing all materials, labor, tools, equipment and appurtenances and maintenance of existing flows. No payment will be made for removal of excess grout from the lateral. Payment will not be considered until the City has received the post video, reviewed and approved the workmanship.

3. No separate payment will be made for cleaning, root removal and television inspection, where required as specified in this section; the cost of such work is considered to be included in the unit price of the appropriate item listed in the bid.

4. The unit bid item shall include provisions to include subsequent re-cleaning of pipelines under the warrantee area and re-testing of sealed joints in the warrantee area during the warrantee period. Any joints which do not pass the warrantee testing shall be re-sealed at no additional cost to the City.

5. No payment will be made for testing and sealing joints associated with Infiltration / Inflow removal prior to installation of pipe liners. This cost shall be included in the cost of lining.

Pay Item	Pay Unit
(size) Sewer Line Pressure Testing and Sealing (joint spacing)	LF
Lateral Line Pressure Testing and Sealing	EA

SECTION 3.10
SEWER LINE CHEMICAL ROOT CONTROL

3.10.01 – Description: The work covered by this Section of the Specifications consists of furnishing of all labor, supervision, equipment, appliances and materials and performing all operations in connection with maintenance of existing flows and performing all operations where chemical root control and inhibiting re-growth of roots within the sanitary sewer lines and manholes without permanently damaging the vegetation producing the roots, and as directed by the City, complete in place and accepted, in accordance with the Drawings and Specifications. If required, this work shall be accomplished 30 days prior to any subsequent cleaning preceding joint testing and repair.

3.10.02 – Materials:

A. Composition of Chemical Root Control Agent

1. The active component for destroying intruding roots shall be a potent, nonsystemic toxin which will kill contracted roots at low concentrations but which will not permanently affect parts of the plant distant from the treated roots. The active ingredient must be spontaneously detoxified by natural chemical or biochemical processes in a relatively short interval following its use. The active ingredient shall not adversely affect the performance of wastewater treatment plants, shall be readily removed in the normal treatment process in such plants, and shall have EPA approval for use in sewer lines. A Material Safety Data Sheet (MSDS) shall be submitted to the City for approval.

2. The active ingredient for destroying root intrusions will be sodium methyldithiocarbamate (anhydrous), Dichlobenil plus a foaming surfactant system or a compound demonstrated to be equal in the preceding characteristics.

3. The active ingredient for inhibiting regrowth of root intrusions shall inhibit root cell growth on contact, but shall not be transported so as to damage other portions of the parent plant. The material shall bind firmly to soil in the vicinity of openings in the sewer line joints so as to form a persistent chemical barrier suppressing the growth of root tips. The material shall be sufficiently stable under the conditions of use to provide protection for twelve months or longer, but shall be subject to decomposition in wastewater treatment plants without disturbing the treatment plant process.

B. Dilution Water

1. In all applications, the root control agent shall be dispersed into clear cool (80°F) water free of acids, alkali, oxidizing agents, or large amounts of oil or other organic compounds or materials. Tanks used for transportation or storage of makeup water shall also be free of materials listed above.

3.10.03 - Construction Methods:

<u>Submittals</u>

A. Shop drawings, a list of materials, and technical data shall be submitted to the City for approval prior to any work being performed under this Section of the Specifications.

B. A Material Safety Data Sheet (MSDS) shall be submitted to the City for approval of each product.

Quality Assurance

A. Chemical root control shall be accomplished in accordance with applicable federal, state and local requirements and ordinances relative to this type of material and usage thereof. Handling and application must be done by authorized manufacturer's representative, certified by the Department of Food and Agriculture as a pesticide applicator.

B. Special attention of the Contractor is directed to the safety requirements and precautions associated with the usage of this type of root control agent. The Contractor shall provide and maintain all provisions required by the Manufacturer, City, Engineer, and all other federal, state and local agencies having jurisdiction over the usage of such agent. The Contractor shall indemnify and save harmless the City and Engineer and their officers, agents, servants and employees as herein specified.

Equipment

A. The basic equipment shall consist of all safety equipment such as; rubber gloves, safety goggles, harness chemical-resistant air mask, traffic safety equipment, etc., foam-maker-generator, mixing tank, 2" flexible hose, hose bell and a 1/2" 12-volt pump to transfer chemical from the containers to mixing tank.

General

A. The method used for killing of roots and inhibiting re-growth of roots within sanitary sewer lines or manholes will be by the application of the chemical root agents by foam, soaking or spraying in accordance with recommended practice for the conditions present at the time of treatment. Chemical root inhibiting agent shall be applied 30 days prior to pipe joint or manhole testing, cleaning and sealing operations.

B. It is intended that no rehabilitation by chemical grouting shall be performed on any sanitary sewer line or manhole that has been scheduled for sealing until the roots have been treated as noted in the plans.

C. The Owner intends to provide full-time resident inspection during Root Control applications. Therefore, treatment for Root Control shall only be performed in the presence of a duly authorized representative of the Owner.

D. The Contractor shall submit all materials information to the Engineer for approval prior to use.

E. Sanitary sewer lines or manholes requiring treatment for Root Control shall not be cleaned prior to application of herbicide chemicals.

Foam Filling Application

A. Where conditions indicate that root control is best accomplished by use of foam filling root control agent (6-12" pipe). The following conditions shall be met:

1. The chemical root control agent used in foam filling application shall be formulated as a solution containing no less than 24.25% and no more than 31% by weight of Metam-Sodium (sodium methyldithiocarbamate, anhydrous) and no less than 1.95% active ingredient by weight of a 50% Dichlobenil wetable powder. The powder must have a particle size of not less than 95% through an ASTM 325 mesh (44 micron) screen; to assure adequate suspension and low abrasion in the foam making equipment. The foaming herbicide shall contain no heavy metals in any of its components. The Metam-Sodium shall be mixed during manufacture with the proper amount of foaming agent (approximately one quart in each gallon of concentrate) to produce stable and effective foam. The foaming root control herbicide should not be applied directly with a jetter truck without the additional compressed air system which is instrumental in creating the proper foam. This foaming root control agent shall be Sanafoam Vaporooter II (product of Airrigation Engineering Company, Inc., Carmel Valley California), Rout as manufactured by Florida Petro Chemicals or its proven equivalent.

2. The foaming root control herbicides will be mixed with water to produce a solution. All solutions will be at a proportion no less than 5% concentrate to 95% water. The solution will yield a minimum 20 gallons of foam per gallon of solution. The foam must be generated by a machine that assures the foam will completely fill the intended pipeline. The equipment and herbicide must function so as to deposit the foam a minimum of 500 feet into the sanitary sewer lines.

3. The foam is to be applied as the hose is withdrawn or retracted toward the foam making unit. The hose may: utilize a two stage nozzle with the capability to first "jet" downstream, then foam as the line is withdrawn; or the hose may be inserted by mechanical means and then withdrawn while foaming.

Foam Coating Application

A. Where root control spraying is determined to be best by application of a foam spraying agent (greater than 12" pipe), the following procedure shall be used:

1. The chemical root control agent used in the foam spraying application shall be formulated as a solution containing no less than 28.4% and no more than 32% by weight of Metam-Sodium (sodium methyldithiocarbamate, anhydrous) and no less than 1.73% active ingredient by weight of a 50% Dichlobenil wetable powder. The powder must have a particle size of not less than 95% through an ASTM 325 mesh (44 micron) screen; to assure adequate suspension and low abrasion in the foam making equipment. The foaming herbicide shall contain no heavy metals in any of its components. The Metam-Sodium shall be mixed during manufacture with the proper amount of foaming agent (approximately one pint in each gallon of concentrate) to produce stable and effective foam. The foaming root control herbicide should not be applied directly with a jetter truck without the additional compressed air system, which is instrumental in

creating the proper foam. This foaming root control agent shall be Vaporooter Foam Coat (product of Airrigation Engineering Company, Inc., Carmel Valley California) or its proven equivalent.

2. The foaming root control herbicides will be mixed with water to produce a solution. All solutions will be at a proportion no less than 7.5% concentrate to 92.5% water. The foam must be generated by a machine that assures the foam will completely coat the intended pipeline. The equipment and herbicide must function so as to uniformly foam-coat the upper two-thirds of the pipe a minimum of 500 feet into the sanitary sewer lines.

3. The line may be foam-coated by means of pulling a properly designed nozzle between manholes, depositing a herbicidal foam on the upper interior walls of the pipe. The coating shall start at the 3 and 9 o'clock positions in the pipe wall and completely coat up to and including the pipe crown.

Storage

A. All materials shall be delivered to the site in undamaged, unopened containers bearing the manufacturer's original labels. A sufficient quantity of root control agent shall be kept on hand near the site of the work to insure that operations will not be delayed by short supply.

Mixing And Handling

A. Mixing and handling of the root control agent, which may be toxic under certain conditions of contact and inhalation, shall be in accordance with the recommendations of the manufacturer and applicable safety codes, and shall be performed in such manner as to minimize any danger to personnel. It is the responsibility of the Contractor to provide appropriate protective and safety measures to insure that chemicals are under his/her control at all times and are not accessible to unauthorized personnel. Any damage to vegetation arising from the misuse of the root control agent will be the responsibility of the Contractor.

Records

A. For each section of the sewer treated for root control, complete, accurate, and legible records of the operations shall be kept by the Contractor. Five (5) copies of the Contractor's root control records shall be furnished to the representative, designated by the Owner, at the end of each day's operations. These records shall show the date of treatment, the amount of agent used, the percent by volume of concentration, the sections of sewer or manhole treated, the equipment used and any other pertinent information.

Training

A. Training in the mixing, application and safety procedure for the foaming herbicide shall be done by trained and licensed personnel authorized to do so by the herbicide manufacturer. The training of personnel will be performed by the herbicide manufacturer and will consist of classroom and field

instruction. A certificate is to be issued from the herbicide manufacturer to each attendee upon satisfactory completion of the training.

Guarantee

A. There shall be a 95% kill of all roots within any treated sewer section. In order to determine the effectiveness of root kill, sampling shall be conducted no less than four months, and no more than eight months after treatment.

B. Any sanitary sewer section or manhole treated shall be guaranteed in writing not to plug up and flood due to tree root obstructions for a period of two years. The guarantee period shall begin two months after the date of treatment and end two years and two months after the date of treatment.

If a guaranteed sewer section or manhole shows less than a 95% kill within four to eight months after treatment, or if a guaranteed sewer section or manhole plugs up and floods due to tree roots during the guarantee period, the Contractor shall retreat that section, manhole-to-manhole or complete manhole, at his/her own expense, or remit to the Owner full payment re-ceived per lineal foot, manhole-to-manhole, for that line or manhole.

3.10.04 - Method Of Measurement:

1. Chemical root control in existing sanitary sewers will be measured for payment in the number of linear feet along the center line of the pipe from center of manhole to center of manhole, as indicated on the drawings.

2. Chemical root control in existing manholes will be measured for payment by the number of manholes treated, as indicated on the drawings.

3.10.05 – Basis of Payment:

1. Chemical Root Control measured as provided above for sewer sections, will be paid for at the Contract unit price as listed in the Bid; which price and payment shall constitute full compensation for furnishing all labor, materials, equipment, and tools to satisfactorily destroy intruding roots including root control materials, sewer flow control and all other tasks and applications incidental and necessary to complete the item as specified herein and as indicated.

2. Chemical Root Control measured as provided above for manholes, will be paid for at the Contract unit price as listed in the Bid; which price and payment shall constitute full compensation for furnishing all labor, materials, equipment, and tools to satisfactorily destroy intruding roots including root control materials and all other tasks and applications incidental and necessary to complete the item as specified herein and as indicated.

Pay Item	Pay Unit
Chemical Root Control	LF
Chemical Root Control for Manholes	EA

SECTION 3.11
ABANDONING SEWER OR UTILITY STRUCTURES

3.11.01 – Description: The work under this Item shall include the abandoning as ordered of all sewer or utility structures or other underground "vaults", etc. that are to remain in place within the project, including catch basins, manholes, drop inlets, etc. Manhole frames and covers or catch basin grates and frames shall be delivered by Contractor to the NBDPW Yard at East Main and Harvard Streets.

3.11.02 – Materials: The backfill material for filling abandoned utility or sewer structures shall conform to the requirement for "Granular Fill" or "Processed Stone" of the NB Standard Specifications.

3.11.03 - Construction Methods: The existing castings shall be removed and delivered to the Public Works yard on Harvard Street. The existing structure walls shall be removed to a point five feet (5') below proposed finished grade. If the top of the existing structure is more than five feet (5') below the proposed finished grade, the walls may be left intact.

All floor slabs shall be broken so as to permit the free passage of water.

All pieces of broken masonry and rubble shall be removed and disposed of as directed by the Engineer.

Backfill shall be placed in 6-inch compacted layers. The backfill shall be placed to the level of the surrounding existing grade, to subgrade or as directed by the Engineer.

3.11.04 - Method of Measurement: This work will be measured for payment by the actual number of units of sewer, utility or other structures abandoned as specified and as approved by the Engineer. Plugs and caps for pipe will not be measured for payment.

3.11.05 - Basis of Payment: This work will be paid for at the contract unit price per each for "Abandoning Sewer Or Utility Structures" as specified and as approved by the Engineer, which price shall include all costs to cut pavement, excavation of the granular backfill material, processed stone, pavement repair, compaction, plugs, breaking, removing and disposing of the structure material, removing and transporting existing castings, and all other materials, equipment, tools, labor and work incidental to or necessary for the completion of the Item. No payment will be made for pipes which are plugged or capped off.

Pay Item	Pay Unit
Abandoning Sewer Or Utility Structure	EA

SECTION 3.12
ABANDONING PIPES AND CONDUITS

3.12.01 – Description: The work under this Item shall consist of the abandoning of existing pipes and conduits which are not removed during the construction of the work under this Contract and which shall be filled with sand and plugged where "To Be Abandoned" is indicated on the Contract Drawings or directed by the Engineer. The Contractor may not be required to fill certain pipes, after abandoning same, being required to plug them only. Unless otherwise specified, such pipes will be noted on the Contract Drawings as "To Be Abandoned Without Filling".

3.12.02 – Materials: Plugs shall be of brick and mortar or as shown on the NB Standard Details or as approved by the Engineer.

Sand for filling the pipes or conduits shall be a fine mason sand as approved by the Engineer.

3.12.03 - Construction Methods: Prior to abandoning any pipes or conduits "To Be Abandoned" under this Contract, it shall be the responsibility of the Contractor to ensure that no active connections remain to the pipes or conduits. Where the existing connections to a sewer is to-be-abandoned cannot be located during the excavation for the installation of the new sewer, the Contractor shall, by closed circuit television or visual inspection (pipes/conduits safe for entry and over 36 inches in diameter), carefully record the exact location of all existing connections thereto and reconnect the same to the new sewer. Should, after said abandoning, live connections be discovered, the Contractor shall be responsible for any damages direct or consequent caused thereby and it shall be his responsibility to perform any and all remedial work to correct same at no additional cost to the Owner.

The Contractor shall fill the pipes or conduits by pumping or blowing sand through long hoses into the pipe or conduit and slowly backing the hose off or some other method that is recommended by the Contractor and approved by the Engineer. Said filling will be done so that the pipe or conduit is completely filled. No more than 150 feet of pipe or conduit shall be filled at one time (75 feet from each end). The Contractor shall submit a plan of his procedure to the Engineer for approval. Wherever possible in larger pipes which are safe to enter, the laterals to the main-line pipe/conduit to be abandoned will also be plugged.

After the pipe or conduit is filled with mason sand, the end of the pipe or conduit shall be plugged with brick and mortar for a minimum thickness of 12 inches.

The Engineer may direct that the Contractor not abandon pipes or conduits but direct that the same be removed. The removal thereof will be paid for in accordance with and under the Item "Trench Excavation and Backfill".

3.12.04 - Method of Measurement: The work for "Abandoning Pipe and Conduits" will be measured for payment by the number of cubic yards of pipe or conduit area actually abandoned, filled and accepted.

Volume shall be exclusive of laterals as may existing on the main line sewer/conduit to be abandoned.

Television or Visual Inspection will not be measured for separate payment.

Pipes and conduits "To Be Abandoned Without Filling" will not be measured for payment.

Plugs/bulkheads will not be measured for payment.

3.12.05 - Basis of Payment: This work will be paid for at the contract unit price per computed cubic yard of the interior of the pipe or conduit abandoned, filled and accepted.

No payment will be made for pipes on conduits abandoned without filling.

The above price shall include the cost of ensuring no live connections (INCLUDING television or Visual Inspection), all filler material, bulkheads, plugs, excavation, sheeting, shoring, dewatering, or incidental expense necessary to meet the 150 maximum length requirement quoted above, the plugging of pipes or conduits to be abandoned without filling, or any other requirement herein and all materials, equipment, tools, labor and work incidental to or necessary for the completion of the Item.

Pay Item	Pay Unit
Abandoning Pipe and Conduits	CY

SECTION 3.13
CLEAN EXISTING DRAINAGE SYSTEM

3.13.01 – Description: This work shall conform to the requirements of Section 6.53, "Clean Existing Drainage System", of the CTDOT Standard Specifications.

Pay Item	Pay Unit
Clean Existing Catch Basin	EA
Clean Existing Manhole	EA
Clean Existing Culvert (6" to 42")	LF
Clean Existing Culvert (Greater than 42")	LF

SECTION 4.01
PORTLAND CEMENT CONCRETE

4.01.01 – Description: This item shall conform to the requirements of Section 6.01 of the CTDOT Standard Specifications, and shall also include concrete for sidewalks, curbing and ramps.

4.01.02 – Materials: Material shall conform to the requirements of Section 6.01.02 of the CTDOT Standard Specifications, as amended below.

A. Testing

(1) Unless otherwise agreed to in writing or amended by City of New Britain Contract Special Conditions, a reasonable amount of testing shall be ordered on an "as needed" basis by the City Engineer. This testing will be performed at the City's expense. If initial testing results indicate that the specifications have not been met, additional testing will be ordered by the City Engineer. This additional testing shall be performed at the Contractor's expense and will continue until such time as the test results indicate conformance is being achieved.

(2) At the request of the City Engineer, the Contractor shall be required, at his expense, to submit certified test reports in accordance with CTDOT Standard Specification, Section 1.06.07 for any materials incorporated into the work. Failure or refusal to comply shall be deemed as grounds for immediate removal of subject materials and replacement with materials for which such reports and certificates can be provided, all at the Contractor's expense.

(3) The City reserves the right to perform, at any time with its own forces and at its own expense, such additional testing as it may deem necessary.

4.01.03 - Construction Methods: Construction methods shall conform to the requirements of Section 6.01.03 of the CTDOT Standard Specifications, as amended below.

Prior to any work, the Contractor shall secure all necessary permits from the City and ascertain the latest requirements for the proposed works.

Pay Item	Pay Unit
(class) Concrete	CY

SECTION 4.02
REINFORCING STEEL

4.02.01 - Description: This item shall conform to the requirements of Section 6.02 “Reinforcing Steel” of the CTDOT Standard Specifications.

Pay Item	Pay Unit
Deformed Steel Bars	LB
Deformed Steel Bars – Epoxy Coated	LB
Welded Wire Fabric	SY

SECTION 4.03
CONCRETE SIDEWALK, CURBING, DRIVEWAY AND PEDESTRIAN RAMPS

4.03.01 – Description: The work covered in this section consists of all equipment, labor, and materials necessary for constructing concrete curbing, sidewalk, driveway ramps, and pedestrian ramps in conformance with the lines and grades shown on the plans, and the thicknesses, cross sections, and details of the standard drawings or as established by the City Engineer. All work must be completed under the supervision of and to the satisfaction of the Board of Public Works and the City Engineer.

4.03.02 – Materials: Material shall be furnished in accordance with the requirements of NB Standard Specifications Sections 4.01 and 4.02 except as hereinafter amended, supplemented, or restricted.

A) General

1) Concrete type shall be Class "C", as defined in CTDOT Standard Specifications, Section M.03. Minimum concrete compressive strength shall be 1800 psi at seven days and 3000 psi at twenty-eight days.

2) Preformed Expansion Joint Material shall conform to the requirements of CTDOT Standard Specifications, Section M.03-7.

3) Welded Wire Fabric shall be 6x6 W1.4.

4) Processed Aggregate Base shall conform to the requirements of CTDOT Standard Specifications Section M.05.01.

5) Paint shall conform with the requirements of CTDOT Standard Specifications, Section M.07.20.

6) Detectable Warning Surface shall comply with current ADA requirements.

B) Cement - only type II Portland Cement shall be used in batching the concrete for these items.

C) Construction Testing - Unless otherwise agreed to in writing or amended by City of New Britain Contract Special Conditions, a reasonable amount of testing shall be ordered on an "as needed" basis by the City Engineer. This testing will be performed at the City's expense. If initial testing results indicate that the specifications have not been met, additional testing will be ordered by the City Engineer. This additional testing shall be at the Contractor's expense and shall be continued until such time as the test results indicate conformance is being achieved.

At the request of the City Engineer, the Contractor shall be required, at his expense, to submit certified test reports in accordance with CTDOT Standard Specifications, Section 1.06.07 for any materials incorporated into the work. Failure or refusal to comply shall be deemed as grounds for immediate removal of subject materials and replacement with materials for which such reports and certificates can be provided, all at the Contractor's expense.

The City reserves the right to perform, at any time with its own forces and at its own expense, such additional testing as it may deem necessary.

4.03.03 - Construction Methods: Construction methods shall conform with Section 4.01.03 of the NB Standard Specifications except as hereinafter amended, supplemented, or restricted.

A) All Items of Work

1) Excavation and Grading

a) The subgrade shall be excavated or filled with suitable material to the required grades and lines. Filled sections shall be compacted and extend a minimum of one foot (1') outside the form lines. The subgrade shall be compacted to a dry density of at least 90% of maximum dry density as determined by AASHTO T-180, Method D. The finished surface of the subgrade shall be smooth, free from surface irregularities and true to line and grade as established by grade hubs or pins.

b) Where spongy, organic or otherwise unsuitable material is encountered, which, in the opinion of the City Engineer, is unsuitable for subgrade, such unsuitable material shall be removed to the depth specified by the City Engineer, and replaced with acceptable material. All such replacement material shall be compacted to a dry density of at least 90% of maximum dry density for the material used as determined by AASHTO T-180, Method D. Any boulders encountered shall be removed for one foot laterally and six inches vertically below all concrete. In no case shall concrete be placed on a saturated base/subgrade or if free water is standing on the base/subgrade.

c) The correct cross sections of the base/subgrade shall be checked before the concrete is placed by testing with a template of wood or metal, the bottom surface of which conforms to the desired contour. Any irregularities thus indicated shall be corrected.

d) The contractor shall, upon removing traffic signs to facilitate sidewalk installation, note the exact locations of the signs and the number of poles supporting each sign. During construction of the sidewalk, the contractor shall install galvanized steel or PVC (Schedule 40) pipe having a minimum 3 ½" inner diameter (ID) and a maximum 4" ID at the sign pole locations. The top of the pipe shall be flush with sidewalk grade and shall extend a minimum of 3" to a maximum of 5" into the processed gravel base. Construction joints shall be made in the concrete at 90 degree increments around the pipe run perpendicular and parallel to the curbing line and extending until they intersect with another construction joint or an expansion joint. The poles shall not be cemented in place.

2) Setting Forms

a) All forms shall be of wood or metal, straight, free from warp and of sufficient strength when staked to resist the pressure of the concrete without springing, and the upper edge shall form a true line. All forms shall be cleaned thoroughly and greased or oiled before concrete is placed against them. Forms that have become worn, bent, or broken shall not be used.

b) Sufficient support shall be given to the form to prevent movement in any direction during concrete placement or as a result of the weight of the concrete. Forms shall not be set until the base/subgrade has been prepared in accordance with these specifications and compacted within one inch (1") of the established grade. When set, the top of the form shall not depart from grade more than one-quarter inch (¼") when checked with a ten-foot (10') straightedge. The alignment shall not vary more than one-half inch (½") in ten feet (10'). Immediately prior to placing the concrete, forms shall be carefully inspected for proper grading, alignment and rigid construction. Adjustments and repairs as needed shall be completed before placing concrete.

c) The Contractor shall provide an approved metal straight edge, ten (10) feet in length for use in checking the alignment of the forms prior to placing the concrete and also to check the concrete surface during the finishing operation.

d) On short radii curves, steel plates or wood which can be readily formed to the desired radii shall be used. Face forms, if used, shall be preshaped to the proper radii. Care shall be exercised to insure conformance with the required cross-section around the entire radius during concrete placement and curing operations.

3) Placing

a) General

Concrete may be placed by an approved slipform/extrusion machine, by the formed method, or by a combination of these methods.

b) Formed Method

i) Before the concrete is placed, the base/subgrade shall be thoroughly dampened so that it is moist throughout, but without puddles of water.

ii) The concrete shall be placed only on a moist base. Concrete shall not be placed on a soft, muddy or frozen base.

iii) Concrete shall be placed as near to its final position as practicable. Precautions shall be taken not to overwork the concrete while it is still plastic.

iv) The concrete shall be thoroughly spaded along the forms to eliminate voids or honeycombs at the edges.

v) The rate of concrete placement shall not exceed the rate at which the various placing and finishing operations can be performed in accordance with these specifications.

vi) The concrete shall be properly placed in forms which are securely set to line and grade, and shall at no time deviate more than ¼" from an accurate straight edge ten (10) feet in length. The operations of depositing and compacting the concrete shall be so conducted that

the concrete shall be smooth and dense, free from honeycomb and free from pockets of segregated aggregate. At the end of the day, or in case of an unavoidable interruption of more than thirty (30) minutes, a transverse construction joint shall be placed at the point of stopping work, provided that the section on which work has been suspended is not less than the minimum length for that particular item or work. Sections less than the minimum length shall be removed. Concrete shall not be placed when weather is stormy, dusty, or otherwise inclement to the point that it precludes good workmanship. Air temperature shall be a minimum of 40 degrees F. and rising when the pour is started unless specific provisions are made for cold weather concreting in accordance with Section 4.01.

c) Machine Method

The slipform/extrusion machine approved shall be so designed as to place, spread, consolidate, screed, and finish the concrete in one complete pass in such a manner that a minimum of hand finishing will be necessary to provide a dense and homogeneous concrete section. The machine shall shape, vibrate, and/or extrude the concrete for the full width and depth of the concrete section being placed. It shall be operated with as nearly a continuous forward movement as possible. All operations of mixing, delivery, and spreading concrete shall be so coordinated as to provide uniform progress, with stopping and starting of the machine held to a minimum.

4) Jointing

a) Expansion joints shall be constructed straight, plumb, and shall extend through the entire section from top to bottom and from edge to back. Preformed expansion joint filler, one-half inch thick, meeting the requirements of Section 4.01, shall be used to form transverse expansion joints. Expansion joints shall be constructed at the intersection with any existing unyielding structures, concrete or stone structure, at the tangent point of curbing radii, and at intermediate intervals as specified for the item of work.

b) Expansion joints in slipformed curbing or walk shall be constructed with an appropriate hand tool by raking or sawing through partially set concrete for the full depth and width of the section. The cut shall be only wide enough to permit a snug fit for the joint filler.

c) After the filler is placed, open areas adjacent to the filler shall be filled with concrete and then troweled and edged.

d) Alternately, an expansion joint may be installed by removing a short section of freshly extruded curbing and gutter immediately, installing temporary holding forms, placing the expansion joint filler, and replacing and reconsolidating the concrete that was removed. Contaminated concrete shall be discarded.

e) As required at the end of day’s run, construction joints shall be made at right angles to the longitudinal axis and shall be located at the regular spacing designated for block joints unless otherwise specifically permitted by the City Engineer. In no case shall any length of walk be less than five (5) feet between joints or any length of curbing less than six (6) feet.

5) Finishing

a) No finishing operation shall be performed while free water is present. Finishing operations shall be delayed until all water and water sheen has left the surface and the concrete has started to stiffen.

b) After water sheen has disappeared, edging operations, where required, shall be completed.

c) After edging and jointing operations, the surface shall be floated with either a wood or a magnesium float.

d) If necessary, tooled joints and edges shall be rerun after floating to maintain uniformity.

e) All honeycombed areas or small defects discovered while concrete is still fresh and has not "set" shall be properly pointed up with 1:2 mix mortar.

f) Face forms, if used, shall be left in place until the concrete has hardened sufficiently so that they can be removed without injury to the curbing. The exposed surfaces shall then be finished smooth and even by means of a moist wood float or a moist brick.

g) Any person who shall construct curbing or walks shall stamp his company name and date of construction at the beginning and end of each days pour so that it shall be legible and visible. Similar stamps should appear in each pedestrian ramp or driveway apron when done by separate pour.

6) Stripping Forms

a) Forms shall remain in place at least twelve (12) hours after concrete has been placed against them or for a longer period if so directed by the City Engineer. Crowbars or other heavy tools shall not be used against green concrete in removing the forms.

b) Forms may be removed at such time as the concrete is sufficiently set that removal will be without danger of chipping or spalling. When forms are removed before the expiration of the curing period, the edges of the concrete shall be protected with moist earth, or sprayed with curing compound. All forms shall be cleaned, oiled and be examined for defects before they are used again.

c) Honeycomb, voids, and surface irregularities are unacceptable and must be corrected by removal of the defective work and replacement. The Contractor may propose correction of the deficient work by means other than removal and replacement. Any attempt at alternative correction must be approved and authorized by the City Engineer, who shall set the specific terms under which the corrective work will be allowed.

7) Backfilling

a) In areas where lawns exist or as shown on the plans, the top four inches (4”) of backfill shall be black loam or good topsoil which is suitable for the growth of lawns. It shall be placed out from the sidewalk or driveway a sufficient distance and in amount to replace turf or lawn removed during installation. Backfill shall be completed by grading to match the existing lawn and the level of the top of the adjacent sidewalk, driveway, or curbing. Disturbed areas shall be seeded or sodded and maintained.

b) Where lawns do not exist, the top four inches (4”) of backfill shall be tamped earth and shall be placed to conform with the typical sections shown on the plans.

c) Backfill shall be compacted to prevent settlement and the surface shall be leveled off to a neat appearing and free draining surface.

B) Additional Requirements for Curbing

1) Placing

a) General

Concrete may be placed by an approved slipform/extrusion machine, by the formed method, or by a combination of these methods.

2) Jointing

a) Formed or Slip Formed Curbing

Curbing constructed by the formed method or slipform machine shall be constructed in sections not less than 6 feet and not more than 20 feet. Non-protruding expansion joints ½ inch thick by the width and depth of the curbing shall be placed at a maximum of 20 feet apart. Only the non-extruding expansion joint of the specified type shall be used and shall be placed so the top of the joint will be flush with the top of the concrete.

b) Jointing New and Existing Curbing Sections

Where the new curbing sections will join existing curbing with a different cross-section, a minimum six (6) foot long transition section shall be constructed. An expansion joint shall be placed at both ends of the transition section.

3) Backfilling

a) After the concrete has set sufficiently and prior to pavement repair, if any, the spaces in back of curbing shall be refilled with suitable material to the required elevations. The fill material shall be thoroughly tamped in maximum 6” thick layers.

b) During backfill and paving, the Contractor must keep curbing aligned and protected from damage. No extra payment will be made for realignment or for replacement of cracked or otherwise damaged curbing.

c) On all pavement repair, the base shall be satisfactorily compacted by tamping or rolling; and the surface course shall be compacted to a smooth even surface, flush with the adjacent pavement with an approved roller. Prior to placing the bituminous concrete, the edges of the existing bituminous shall be satisfactorily brushed or mopped with a liberal application of hot liquid asphalt or emulsified asphalt. After placing and compaction of the bituminous concrete, the joint between the existing and the new bituminous concrete shall be satisfactorily coated and sealed with hot liquid asphalt or emulsified asphalt and dusted with fine sand to prevent tracking.

C) Additional Requirements for Sidewalk, Driveway Ramps and Pedestrian Ramps

1) Excavation And Grading

The concrete shall be placed on a six (6) inch thickness of processed aggregate compacted to 95% of the maximum dry density at optimum moisture as determined by AASHTO T-180, Method D.

2) Reinforcing Steel

Welded wire fabric ends and sides shall overlap no less than one mesh and shall be fastened by wires at intervals not to exceed one foot.

3) Jointing

a) All concrete walks under 7 feet in width must be laid in sections not to exceed 20 feet in length and shall be separated with a strip of non-protuding expansion joint ½" thick and the full depth of the concrete set flush with the finished surface.

b) All concrete walks over 7 feet wide must be laid in sections not to exceed 15 feet in length and shall be separated with a strip of non-protruding expansion joint ½" thick and the full depth of the concrete set flush with finished surface.

c) All walks shall be marked with construction joints in 5 foot blocks with each section marked so as to give the appearance of separate blocks. These construction joints shall have a uniform depth one quarter of the thickness of the concrete.

d) In full concrete walks between the curbing and any building there shall be placed a strip of expansion joint filler ½" thick (¼" for granite curbing) and the full depth of the concrete set flush with the finished surface on or about the street line.

e) All saw cuts shall be in neat straight lines where proposed meets existing construction or as directed by the City Engineer. Place an expansion joint at each saw cut. Saw cut shall be completely through the concrete.

4) Detectable Warning Surface shall consist of raised truncated domes with a diameter of nominal 0.9 in , a height of nominal 0.2 in and a center-to-center spacing of nominal 2.35 in and shall contrast visually with adjoining surfaces, either light-on-dark, or dark-on-light. Installation shall comply with current ADA requirements.

5) Finishing

a) Broomed Finish

The surface of concrete shall be finished true to the lines and grades shown on the plans. Concrete shall be worked until the coarse aggregate is forced down into the body of the concrete and no coarse aggregate is exposed. Concrete that is adjacent to forms and formed joints shall be edged with a suitable edging tool to the dimensions shown on the plans. The surface shall than be floated with a wooden or other suitable float to a smooth and uniform surface. If necessary, tooled joints and edges shall be rerun after floating to maintain uniformity. When the concrete has hardened sufficiently, the surface shall be given a broom finish using a soft-bristled, long handled push broom. The strokes shall be square across the concrete from edge to edge with adjacent strokes overlapped. Strokes shall be made without tearing the concrete. The broomed finish shall produce regular corrugations not over one-eighth inch (1/8”) in depth.

6) Backfilling

After the forms have been removed suitable fill material shall be placed along the edge of the walk and tamped by either hand or mechanical tampers to a density at least equal to that of the adjacent ground. The finish grade and section shall be as indicated on the drawings and to the satisfaction of the City Engineer.

D) Protection

The Contractor shall always have materials available to protect the surface of the plastic concrete against rain. These materials shall consist of waterproof paper or plastic sheeting. For slipform construction, materials such as wood planks or forms to protect the edges shall also be required.

Upon completion, all items of work under this specification shall be protected from travel and/or adjacent construction operations (e.g. paving) for a time sufficient to insure they are not damaged, but in no case for less than 72 hours.

E) Tolerances

The work shall be performed in a manner which results in the item being constructed true to line and grade, uniform in appearance and structurally sound. Items found with unsightly bulges, ridges, low spots or other defects shall be removed and replaced at the Contractor’s expense if the City Engineer considers them to be irreparable. When checked with a ten foot (10’) straightedge, grade shall not deviate by more than one-quarter inch (¼”) and alignment shall not vary by more than one-half inch (½”).

F) Warranty

All concrete sidewalks, curbing, driveway ramps and pedestrian ramps constructed shall be guaranteed for a period of one (1) year, said period to commence at the time of official acceptance.

4.03.04 - Method of Measurement:

Concrete Sidewalks, Driveway Ramps and Pedestrian Ramps: This work will be measured for payment by the actual number of square feet of completed and accepted concrete sidewalks, driveway ramps or pedestrian ramps. This measurement should not include the curbing area, for either separate or monothic sidewalk or driveway ramp.

Concrete Curbing: This work will be measured for payment by the actual number of linear feet of completed and accepted concrete curbing. This measurement should include the curbing, either separate or monolithic, along sidewalk or driveway ramps.

4.03.05 – Basis of Payment:

A) General

1) The unit prices for all items of work shall include the cost of all saw cuts to meet existing facilities, the cost of removing and disposing of all surplus material, excavation, preparation of subgrade and base, base material, concrete (including additives), formwork, welded wire fabric, jointing, shoring, backfill, restoration of adjacent pavement and grassed areas, painting and cross walk adjustment, and all other labor, equipment, and material incidental or necessary to complete the item in accordance with the plans and specifications.

2) Unless otherwise specified, there will be no direct payment for adjusting to grade monuments, valve boxes, manhole frames and covers, hatchways, or other existing surface structures in any new or reconstructed walk, the cost of this work being considered to be included in the unit price for the item of work.

3) Openings in walk for tree wells and planters shall be determined prior to the start of construction. No additional payment for extra formwork, etc. occasioned by these features shall be made, the cost of this work being considered to be included in the unit price for the item of work.

B) Sidewalk and Pedestrian Ramps

Standard concrete walk, including monolithic walk and concrete pedestrian ramps, shall be paid for at the contract unit price per square foot for “Concrete Sidewalk”, which price shall include the cost of all scoring and joints, as specified. When the walk is poured contiguous with concrete curbing, the top width of the curbing (8”) shall not be used to compute the payment area of the walk. The price shall also include furnishing and installing an ADA compliant detectable warning surface.

C) Curbing

Concrete shall be paid for at the contract unit price per linear foot for “Concrete Curbing”. Curbing shall include the New Britain standard curbing, recessed curbing, recessed curbing in driveway aprons, and the curbing in monolithic walks and pedestrian ramps.

D) Driveway Ramps

Driveway ramps shall be paid for at the contract unit price per square foot for “Concrete Driveway Ramp”, as measured along the exposed face of the curbing from the P.C. of the driveway radius. The top width of the recessed curbing (8”) shall not be used to compute the payment area of the driveway.

Pay Item	Pay Unit
Concrete Curbing	LF
Concrete Sidewalk	SF
Concrete Driveway Ramp	SF

SECTION 4.04
GRANITE CURBING

4.04.01 – Description: The work shall conform to the requirements of Section 8.13 "Stone Curbing" of the CTDOT Standard Specifications, amended as follows.

4.04.02 – Materials: Base material for granite curbing shall be processed stone or subbase, as shown on the Standard Details, and conform to the appropriate specification section.

Class "C" Concrete shall conform to Section 4.01.02 of these specifications.

4.04.03 – Construction Methods: Class "C" concrete shall be placed at each joint for straight curbing, and continuously for curved curbing and granite curbing at pedestrian ramps, as shown on standard details.

4.04.05 - Basis For Payment: Payment for this work shall also include furnishing and placement of Class "C" concrete, as described herein.

Pay Item	Pay Unit
Granite Curbing – Straight	LF
Granite Curbing – Curved	LF

SECTION 4.05
REMOVAL OF EXISTING MASONRY

4.05.01 – Description: The item shall conform to the requirements of Section 9.74 "Removal of Existing Masonry" of the CTDOT Standard Specifications.

Pay Item	Pay Unit
Removal of Existing Masonry	CY

SECTION 5.01
BITUMINOUS CONCRETE

5.01.01 – Description: All aspects of Project Work covered by this specification shall be as set forth in Section 4.06 "Bituminous Concrete" of CTDOT Standard Specifications.

Pay Item	Pay Unit
Bituminous Concrete (class)	TON
Material for Tack Coat	GAL

SECTION 5.02.01
TEMPORARY PAVEMENT REPAIR

5.02.01.01 – Description: Under this item, the Contractor shall furnish and install a temporary hot bituminous pavement mix three inches (3”) in depth over sidewalks, trenches or other excavation in locations as shown on the plans or as ordered by the Engineer.

This section shall not apply to repairs on longitudinal trenches that run parallel to the flow of traffic for a length of over 50’ or areas of three or more trenches perpendicular to the flow of traffic with less than 75’ of separation.

5.02.01.02 – Materials: The material for the temporary pavement repair shall be Bituminous Concrete Class 1 and shall conform to Section M.04.

5.02.01.03 – Construction Methods: On areas of backfilled trenches, as ordered by the Engineer, the Contractor shall construct a temporary three inch (3”) surface of hot mix bituminous concrete material, rolled with a five (5) ton roller and kept in good repair for a minimum of twelve (12) months. The Engineer may give permission to make final repairs at an earlier date.

If after installation of the repair, the fill over the trenches or other excavation area settles, new bituminous material must be added and compacted. During the life of this Contract all temporary repairs must be kept in a smooth, safe condition.

When backfill in trenches has settled, as determined by the Engineer, all cuts and settled or damaged areas in pavement, sidewalks, driveways, curbs, gutters and other street fixtures must be permanently repaired in accordance with the applicable items of these specifications.

All costs for temporary road surfaces, repairs and maintenance thereof shall be included in the unit price bid for temporary pavement.

This contract will not be considered as completed until such repairs and restoration of pavement, etc., have been fully completed and accepted by the City Engineer.

5.02.01.04 – Method of Measurement: This work shall be measured by the actual number of square yards of completed and accepted temporary pavement repair.

5.02.01.05 - Basis of Payment: This work shall be paid for at the unit price bid per square yard of temporary pavement repair installed and accepted, as ordered by the Engineer, including all work incidental thereto, measured completed in place. There shall be no payment for pavement repairs outside of the limits of excavation as defined by the Standard Details.

The Contractor shall be responsible for replacing and maintaining all temporary pavement damaged during the course of construction without additional compensation.

This item shall also include maintenance of the trench for the specified duration and traffic protection items required to perform work.

Pay Item	Pay Unit
Standard Temporary Pavement Repair	SY

SECTION 5.02.02
PERMANENT PAVEMENT REPAIR IN CITY STREETS

NOTICE:
In general, the City of New Britain will make all permanent repairs to trench excavations. Prior to issuance of a permit, the permittee will be required to make payment for the cost of the permanent repair. The unit price for the repair work will be as follows:

- **Permanent Pavement Repair - $500.00 per trench**

The following specification reflects the complete item, as if a Contractor were performing all work. It is intended to describe activity which will be performed by the City and may be paid by the Utility/Developer.

5.02.02.01 - Description: Under this item, the Contractor shall furnish and place all materials necessary to accomplish permanent pavement repair in existing pavements, driveways or other areas cut by trenching operations under this contract, except for repairs on longitudinal trenches that run parallel to the flow of traffic for a length of over 50' or areas of three or more trenches perpendicular to the flow of traffic with less than 75' of separation.

This item will not be used for pavement replacement in State Highways.

5.02.02.02 - Materials: The materials for the bituminous concrete mixture shall conform to the requirements of Section 4.06.02 and M.04 of the CTDOT Standard Specification.

Bituminous material for the tack or prime coat shall conform to Section M.04 of the CTDOT Standard Specification.

Material for joint sealer for pavement shall be a rubber compound of the hot-poured type and shall conform to Sub-Article M.04.02 of the CTDOT Standard Specification.

5.02.02.03 - Construction Methods: Permanent Pavement repair shall conform to the requirements of Section 4.06.03 of the CTDOT Standard Specification.

Permanent Pavement repairs shall not be made until such time as daily temperatures are forty degrees (40°) (F) or higher, and only after such time as the temporary road repairs have been subjected to vehicle traffic or other means so as to thoroughly consolidate the fill in the trenches, as directed by the Engineer. The trenches shall then be graded to receive the two course permanent pavement materials. If temperature conditions permit, permanent pavement repairs will be made twelve (12) months after completion of the excavation, coincident with temperature considerations. Restoration of cuts is to be made during the months of April through November 15th, so as to have a minimum of unrestored cuts during the winter months.

For permanent pavement repair, the temporary patch shall be removed and the edges of the existing pavement shall be restored by excavating a section at least twelve inches (12") wider than the original width on both sides of the excavation, cut in a straight, even line (saw cut edges of existing concrete

pavement) and shall also include pavement damaged in the surrounding area because of construction activity, trench failure due to lack of trench support, cracking pavement, etc., in the immediate areas of the excavation. The excavation shall be to a depth of five inches (5”) below the adjoining pavement surface, compacted and a bituminous tack coat applied prior to the installation of the 2 ½”, when compacted, Bituminous Concrete Class 1 binder course and the 2 ½”, when compacted, Bituminous Concrete Class surface course. The surface course shall be brought flush with the adjoining pavement and finished to match it and shall be in accordance with the general practices for the construction of a five inch (5”) hot mix asphalt pavement. Binder and surface courses shall be compacted with a steel wheel tandem roller weighing not less than ten (10) tons.

Regardless of the type of original pavement, the replacement shall be as outlined above.

The preparation of the 18” deep processed stone base shall conform to Section 2.13 of these specifications.

All surplus material remaining after completion of the work shall be removed by the Contractor.

The edges shall be sealed by painting the joints with an asphaltic joint sealer.

6.02.02.04 – Method of Measurement: This item shall be measured by the square yard, in place, of permanent pavement repair installed and accepted. The maximum pay width used to compute this quantity shall be as indicated on the Contract Drawings or as ordered by the Engineer. If actual width is less than the maximum allowed, actual width will be paid.

If it is necessary to install the repair at a width larger than the maximum allowed to meet the above construction method requirements, the Contractor shall do so at his own expense.

6.02.02.05 – Basis of Payment: This work shall be paid for at the contract unit price per square yard for “Standard Permanent Pavement Repair”. The contract price shall include the cost of removal of temporary pavement, preparation of sub-grade, cutting, matching and sawing pavement, dust control, re-setting all manhole and catch basin frames and covers, valve boxes, access covers and other items which have a fixed relationship to finished grade, as necessary, application of tack coat, two-course hot mix asphalt, trench edge sealing and all equipment, tools, materials, labor and work incidental to or necessary for the completion of the item.

This payment shall also include any additional material or labor required for corrective work necessitated by settlement through the guarantee period of this Contract.

If no item for this work appears in the Bid Proposal, the cost of such work will be considered to be included in the prices bid for other items of work.

Pay Item	Pay Unit
Standard Permanent Pavement Repair	SY

SECTION 5.03.01
LONGITUDINAL UTILITY TRENCH TEMPORARY PAVEMENT REPAIR

5.03.01.01 – Description: This specification applies to utility installations (storm and sanitary sewer, water, gas, electric, etc.) in City streets, which are oriented longitudinally to the flow of traffic and are over fifty feet (50') length. It shall also apply to areas where three or more utility service connections are closer than seventy-five feet (75') and cross perpendicular to the flow of traffic. Under this item the Contractor shall furnish and place base materials and temporary hot bituminous pavement mix, as shown on the City of New Britain Standard Details or as ordered by the Engineer.

Utility building service trenches crossing other travel lanes shall be perpendicular to the flow of traffic.

Service trenches (three or more) which are seventy-five feet (75') apart or more shall be repaired per City of New Britain "Standard Utility Trench Repair" detail.

5.03.01.02 – Materials: The materials for the bituminous concrete mixture shall be Bituminous Concrete Class 1 or Superpave 0.50" and shall conform to the requirements of Section 4.06.02 and M.04 of the current version of the State of Connecticut Standard Specifications for Roads, Bridges and Incidental Construction (hereinafter referred to as CTDOT Standard Specifications).

Bituminous material for the tack or prime coat shall conform to the requirements of Section 4.06.02 and M.04 of the CTDOT Standard Specifications.

The material for the processed stone shall conform to the requirements of Section 2.13 of these specifications.

5.03.01.03 – Construction Methods: On areas of backfilled trenches, as ordered by the Engineer, the Contractor shall place 18" of processed stone base and construct a temporary <u>five inch (5")</u> surface, in two (2) courses, of hot mix bituminous concrete material, rolled with a ten (10) ton roller. This temporary pavement shall be kept in good repair for a period of twelve (12) months, before permanent repairs are undertaken. The Engineer may decide to make permanent repairs at an earlier date.

The Contractor is required to provide maintenance and protection of traffic per City of New Britain Standard Specifications for Municipal Construction (hereinafter referred to as NB Standard Specifications), or as directed.

If after installation of the repair, the fill over the trenches or other excavation area settles, new bituminous material must be added and compacted. During the life of this Contract all temporary repairs must be kept in a smooth, safe condition.

When backfill in trenches has settled, as determined by the Engineer, all cuts and settled or damaged areas in pavement, sidewalks, driveways, curbs, gutters and other street fixtures must be repaired in accordance with the applicable items of these specifications or as directed by the Engineer.

All costs for temporary road surfaces, repairs and maintenance thereof shall be included in the Contractor's price for this item.

This item will not be considered as completed until such time as the Engineer has determined that permanent pavement milling and overlay can be performed.

5.03.03.04 – Method of Measurement: This work will be measured for payment by the actual number of square yards of completed and accepted temporary trench repair.

5.03.03.05 – Basis of Payment: This work shall be paid for at the contract unit price per square yard for "Longitudinal Utility Trench Temporary Pavement Repair", complete in place and accepted, as described herein, including all equipment, tools, labor and materials incidental thereto.

There shall be no payment for pavement repairs outside of the limits of excavation as defined by the City of New Britain Standard Details.

The Contractor shall be responsible for replacing and maintaining: all temporary pavement damaged during the course of construction; or any areas which may have settled prior to placement of permanent repair; without additional compensation.

Also included in this item shall be any maintenance and protection of traffic required.

Processed stone shall be measured and paid in accordance with Section 2.13 of the City Standard Specification.

Pay Item	Pay Unit
Longitudinal Temporary Pavement Repair	SY

SECTION 5.03.02
LONGITUDINAL UTILITY TRENCH PERMANENT PAVEMENT REPAIR

NOTICE:
The City of New Britain will make all permanent repairs to trench excavations. Prior to the issuance of a permit, the permittee will be required to make payment for the cost of the permanent repair. Unit prices for the repair work will be based on current City contracts for such work. In the absence of City Contract items, current CTDOT unit prices will be used.

January 2008 CTDOT Prices

- **Milling 0-4" – $10.00 / sy**
- **Bituminous Concrete Class 1 - $95.54/ton @ 2" = $10.99/sy**
- **Superpave 0.500" – $116.25 / ton @ 2" = $13.37 / sy**
- **Material for Tack Coat - $7.50 / gal. @ 0.1 gal/sy = $0.75 /sy**
- **Sawing and Sealing Joints - $12.00 / lf**
- **Maintenance and protection of Traffic – ls @ 1% of total of other items**

If the utility upgrade is in a street which is scheduled to be resurfaced under the City's Annual Paving Program, the City Engineer may waive the cost of permanent pavement repairs.

The following specification reflects the complete item, as if a Contractor were performing all work. It is intended to describe activity which will be performed by the City and may be paid by the Utility/Developer.

5.03.02.01 – Description: This specification applies to utility installations (storm and sanitary sewer, water, gas, electric, etc.) in City streets, which are oriented longitudinally to the flow of traffic, are over fifty (50) length. It shall also apply to areas where utility service connections are closer than seventy-five feet (75') and cross perpendicular to the flow of traffic. In either case the areas must have had "Longitudinal Utility Trench Temporary Pavement Repair" in place for a sufficient length of time, as determined by the Engineer.

This item shall consist of the milling, removal, and disposal of existing bituminous concrete pavement and placement of a permanent hot bituminous pavement overlay, as shown on the Standard Details or as ordered by the Engineer.

5.03.02.02 – Materials: The materials for the bituminous concrete mixture shall be Bituminous Concrete Class 1 or Superpave 0.50" and shall conform to the requirements of Section 4.06.02 and M.04 of the current version of the State of Connecticut Standard Specifications for Roads, Bridges and Incidental Construction (hereinafter referred to as CTDOT Standard Specifications).

Bituminous material for the tack or prime coat shall conform to Section 4.06.02 and M.04 of the CTDOT Standard Specifications.

Material for joint sealer for pavement shall be a rubber compound of the hot-poured type and shall conform to Sub-Article M.04.01 of the CTDOT Standard Specifications.

5.03.02.03 – Construction Methods: On utility trenches that have had "Longitudinal Utility Trench Temporary Pavement Repair" in place for a sufficient length of time, as determined by the Engineer, the contractor shall mill and overlay an area surrounding and including the trench excavation to a depth of two (2) inches. The area shall be at least the width of the travel lane in which the excavation was made, or a minimum of ten (10') feet wide, as directed by the Engineer. It shall extend a minimum of ten feet (10') beyond the beginning and the end of the original trench excavation.

Permanent Pavement repairs shall not be made until such time as daily temperatures are forty degrees (40°) (F) or higher.

Milling:
The equipment for milling the pavement surface shall be designed and built for milling flexible pavements and shall have a minimum 6 foot cutting width. It shall be self propelled with sufficient power, traction, and stability to maintain depth and slope and shall be capable of removing the existing bituminous concrete pavement to the line, grade, and typical cross-section shown on the plans.

The milling machine shall be equipped with a built in automatic grade control system that can control the longitudinal profile and the transverse cross-slope to produce the specified results. The longitudinal controls shall be capable of operating from any longitudinal grade reference, including string line, ski (30 feet minimum), mobile string line (30 foot minimum), or matching shoe. The transverse controls shall have an automatic system for controlling cross-slope at a given rate.

The machine shall be capable of operating at a minimum speed of 10 feet per minute and be able to provide a 0 to 4 inch deep cut (minimum) in one pass. It shall be designed so that the operator can at all times observe the milling operation without leaving the control area of the machine.

The teeth on the revolving cutting drum must be continually maintained and shall be replaced as warranted to provide a uniform pavement texture.

The machine shall be equipped with an integral pickup and conveying device to immediately remove material being milled from the surface of the roadway and discharge the millings into a truck, all in one operation. The machine shall also be equipped with a means of effectively limiting the amount of dust escaping from the milling and removal operation in accordance with local, State, and Federal air pollution control laws and regulations.

When milling smaller areas or areas where it is impractical to use the above described equipment, the use of a smaller or lesser equipped milling machine may be permitted when approved by the Engineer.

A sweeper equipped with a water tank, spray assembly to control dust, a pick-up broom, a dual gutter broom, and a dirt hopper shall be provided by the Contractor. The sweeper shall be capable of removing millings and loose debris from the textured pavement. Other sweeping equipment may be provided in lieu of the sweeper when approved by the Engineer.

The milled surface shall provide a satisfactory riding surface with a uniform textured appearance. The milled surface shall be free from gouges, excessive longitudinal grooves and ridges, oil film, and other imperfections that are a result of defective equipment, improper use of equipment, or poor

workmanship. Any unsatisfactory surfaces produced are the responsibility of the Contractor and shall be corrected at the Contractor's expense and to the satisfaction of the Engineer.

Unless otherwise specified, milling shall be done to improve rideability and/or cross-slope. The existing pavement shall be removed to the average depth shown on the plans, in a manner that will restore the pavement surface to a uniform cross-section and longitudinal profile. The longitudinal profile of the milled surface shall be established by a stringline, mobile stringline, or mobile ski. The cross-slope of the milled surface shall be established by a second sensing device or by an automatic cross-slope control mechanism. The Contractor will be responsible for providing all grades necessary to remove the material to the proper line, grade, and typical cross-section shown on the plans. The Engineer may waive the requirement for automatic grade or slope controls where the situation warrants such action.

Protection shall be provided around existing catch basin inlets, manholes, utility valve boxes, and any similar structures. The surface shall be removed completely adjacent to existing structures. Any damage to such structures as a result of the milling operation is the Contractor's responsibility and shall be repaired at the Contractor's expense.

To prevent the infiltration of milled material into the storm sewer system the Contractor shall take special care to prevent the milled material from falling into the inlet openings or inlet grates. Any milled material that has fallen into inlet openings or inlet grates shall be removed at the Contractor's expense.

At all permanent limits of milling, a clean vertical face shall be established prior to paving. No vertical faces, transverse or longitudinal, shall be left exposed to traffic

Prior to placement of the overlay, the pavement shall be thoroughly swept with a sweeper or other approved equipment to remove, to the greatest extent practicable, material which will become airborne under traffic. This operation shall be conducted in a manner so as to minimize the potential for creation of a traffic hazard and to comply with local, State, and Federal air pollution control laws and regulations. Any damage done to traffic as a result of milled material becoming airborne is the responsibility of the Contractor and shall be repaired at the Contractor's expense.

The milled surface will be tested with a 10 foot straightedge furnished by the Contractor. The variation of the top of ridges from the testing edge of the straightedge, between any two ridge contact points, shall not exceed 3/8 inch. The variation of the top of any ridge from the bottom of the groove adjacent to that ridge shall not exceed 3/8 inch. Any point in the surface not meeting these requirements shall be corrected as directed by the Engineer at the Contractor's expense.

The Contractor may be waived of the straightedge surface requirements stated in the preceding paragraph in areas where a surface lamination between bituminous concrete layers or a surface lamination of bituminous concrete on Portland cement concrete causes a non-uniform texture to occur. This is subject to the approval of the Engineer.

Overlay:

The Contractor shall apply tack coat to the milled area and place Bituminous Concrete Class 1 or Superpave 0.50” overlay. The finished surface shall be smooth and flush with the adjacent existing pavement. This work shall conform to Section 4.06.03 of the CTDOT Standard Specifications.

Pavement joints shall be sealed with an approved asphaltic sealer.

The Contractor shall provide any required maintenance and protection of traffic and perform all work in a manner which safeguards the traveling public.

5.03.02.04 – Method of Measurement: This work will be measured for payment by the actual number of square yards of completed and accepted milled and overlaid area.

5.03.02.05 – Basis of Payment: This work shall be paid for at the contract unit price per square yard for “Longitudinal Utility Trench Permanent Pavement Repair” complete in place and accepted, including milling and removal of existing bituminous surface, furnishing and application of tack coat, furnishing and placement of overlay and joint sealer, and all equipment, tools, labor and materials incidental to performance of the work described herein.

The contract price shall include the cost of water for dust control, re-setting all manhole and catch basin frames and covers, valve boxes, access covers and other items which have a fixed relationship to finished grade, as necessary.

This payment shall also include any additional material or labor required for corrective work to the permanent overlay, necessitated by settlement, through the guarantee period of this Contract.

Any Contractor costs for maintenance and protection of traffic shall also be included in this item.

Pay Item	Pay Unit
Longitudinal Permanent Pavement Repair	SY

NOTICE TO UTILITY/CONTRACTOR REGARDING THIS WORK

When the work described herein is performed by a public or private utility company in conjunction with a facility installation/upgrade, it shall be the responsibility of that utility to bear the costs of said work. Performance of this work should be included in the utility Contractor's scope and shall be paid by the Utility.

In certain cases, the utility will be required to provide for additional milling and overlay. Those cases would include but are not limited to:

- If service connections, installed perpendicular to the main, cross into another travel lane, at a rate less than every 75' (three or more), the utility will mill and overlay the affected portions of that additional travel lane.

- If the City street in which the utility is installing/upgrading their facilities has been MILLED AND OVERLAYED by others within the last 3 years, the utility will re-mill and re-pave, CURB TO CURB, all disturbed areas unless otherwise approved by the City Engineer.

- If the City street in which the utility is installing/upgrading their facilities has been RECONSTRUCTED by others within the last 5 years, the utility will mill and pave, CURB TO CURB, all disturbed areas unless otherwise approved by the City Engineer.

From CTDOT Item Master List dated 01/02/08

0406236	A	MATERIAL FOR TACK COAT	gal	7.50
0406296	A	MILLING	s.y.	10.00
0406303	A	SAWING AND SEALING JOINTS	l.f.	14.00
0406311	A	SAWING AND SEALING JOINTS IN BITUMINOUS CONCRETE OVERLAY	l.f.	10.00
0406012	A	BITUMINOUS CONCRETE - CLASS 1	ton	95.54
0406442	A	SUPERPAVE 0.500"	ton	85.00

SECTION 5.04
BITUMINOUS CONCRETE CURBING

5.04.01 – Description: Work under this item shall conform to the requirements of Section 8.15 "Bituminous Concrete Curbing" of the CTDOT Standard Specifications, as amended herein.

This type of curbing can only be used on private property unless otherwise approved by the City Engineer.

Pay Item	Pay Unit
Bituminous Concrete Lip Curbing	LF
Bituminous Concrete Park Curbing	LF

SECTION 5.05
BITUMINOUS CONCRETE SIDEWALK AND DRIVEWAY

5.05.01 – Description: All aspects of Project Work covered by this specification shall conform to Section 9.22 "Bituminous Concrete Sidewalk, Bituminous Concrete Driveway" of CTDOT Standard Specification.

Pay Item	Pay Unit
Bituminous Concrete Sidewalk	SY
Bituminous Concrete Driveway	SY
Bituminous Concrete Driveway - Commercial	SY

SECTION 5.06
MILLING OF BITUMINOUS CONCRETE

5.06.01 - Description: This work shall consist of the milling, removal, and disposal of existing bituminous concrete pavement. It shall be performed in accordance with these specifications and in conformity with the line, grade, and typical cross-section shown on the plans. Unless otherwise specified, the milled material shall become the property of the Contractor.

5.06.03 – Construction Methods: The equipment for milling the pavement surface shall be designed and built for milling flexible pavements and shall have a minimum 6 foot cutting width. It shall be self propelled with sufficient power, traction, and stability to maintain depth and slope and shall be capable of removing the existing bituminous concrete pavement to the line, grade, and typical cross-section shown on the plans.

The milling machine shall be equipped with a built in automatic grade control system that can control the longitudinal profile and the transverse cross-slope to produce the specified results. The longitudinal controls shall be capable of operating from any longitudinal grade reference, including string line, ski (30 feet minimum), mobile string line (30 foot minimum), or matching shoe. The transverse controls shall have an automatic system for controlling cross-slope at a given rate.

The machine shall be capable of operating at a minimum speed of 10 feet per minute and be able to provide a 0 to 4 inch deep cut (minimum) in one pass. It shall be designed so that the operator can at all times observe the milling operation without leaving the control area of the machine.

The teeth on the revolving cutting drum must be continually maintained and shall be replaced as warranted to provide a uniform pavement texture.

The machine shall be equipped with an integral pickup and conveying device to immediately remove material being milled from the surface of the roadway and discharge the millings into a truck, all in one operation. The machine shall also be equipped with a means of effectively limiting the amount of dust escaping from the milling and removal operation in accordance with local, State, and Federal air pollution control laws and regulations.

When milling smaller areas or areas where it is impractical to use the above described equipment, the use of a smaller or lesser equipped milling machine may be permitted when approved by the Engineer.

A sweeper equipped with a water tank, spray assembly to control dust, a pick-up broom, a dual gutter broom, and a dirt hopper shall be provided by the Contractor. The sweeper shall be capable of removing millings and loose debris from the textured pavement. Other sweeping equipment may be provided in lieu of the sweeper when approved by the Engineer.

The pavement surface shall be removed to the line, grade, and typical cross-section shown on the plans. The milled surface shall provide a satisfactory riding surface with a uniform textured appearance. The milled surface shall be free from gouges, excessive longitudinal grooves and ridges, oil film, and other imperfections that are a result of defective equipment, improper use of

equipment, or poor workmanship. Any unsatisfactory surfaces produced are the responsibility of the Contractor and shall be corrected at the Contractor's expense and to the satisfaction of the Engineer.

When removing a bituminous concrete pavement from an underlying Portland cement concrete pavement, all of the bituminous concrete pavement shall be removed to the greatest extent practicable, leaving a uniform surface of Portland cement concrete, unless otherwise directed by the Engineer.

Unless otherwise specified, milling shall be done to improve rideability and/or cross-slope. The existing pavement shall be removed to the average depth shown on the plans, in a manner that will restore the pavement surface to a uniform cross-section and longitudinal profile. The longitudinal profile of the milled surface shall be established by a stringline, mobile stringline, or mobile ski. The cross-slope of the milled surface shall be established by a second sensing device or by an automatic cross-slope control mechanism. The Contractor will be responsible for providing all grades necessary to remove the material to the proper line, grade, and typical cross-section shown on the plans. The Engineer may waive the requirement for automatic grade or slope controls where the situation warrants such action.

Protection shall be provided around existing catch basin inlets, manholes, utility valve boxes, and any similar structures. Any damage to such structures as a result of the milling operation is the Contractor's responsibility and shall be repaired at the Contractor's expense.

To prevent the infiltration of milled material into the storm sewer system the Contractor shall take special care to prevent the milled material from falling into the inlet openings or inlet grates. Any milled material that has fallen into inlet openings or inlet grates shall be removed at the Contractor's expense.

At all permanent limits of milling, a clean vertical face shall be established prior to paving. No vertical faces, transverse or longitudinal, shall be left exposed to traffic. If any vertical face is formed in an area exposed to traffic a temporary paved transition will be established according to the requirements shown in the Special Provision, "Transitions for Roadway Surface." If a vertical face is not formed and the milling machine is used to temporarily transition the milled pavement surface to the existing pavement surface, the length of the temporary transition shall conform to the requirements shown in the Special Provision, "Transitions for Roadway Surface."

Prior to opening an area which has been milled to traffic, the pavement shall be thoroughly swept with a sweeper or other approved equipment to remove, to the greatest extent practicable, material which will become airborne under traffic. This operation shall be conducted in a manner so as to minimize the potential for creation of a traffic hazard and to comply with local, State, and Federal air pollution control laws and regulations. Any damage done to traffic as a result of milled material becoming airborne is the responsibility of the Contractor and shall be repaired at the Contractor's expense.

The milled surface will be tested with a 10 foot straightedge furnished by the Contractor. The variation of the top of ridges from the testing edge of the straightedge, between any two ridge contact points, shall not exceed 3/8 inch. The variation of the top of any ridge from the bottom

of the groove adjacent to that ridge shall not exceed 3/8 inch. Any point in the surface not meeting these requirements shall be corrected as directed by the Engineer at the Contractor's expense.

The Contractor may be waived of the straightedge surface requirements stated in the preceding paragraph in areas where a surface lamination between bituminous concrete layers or a surface lamination of bituminous concrete on Portland cement concrete causes a non-uniform texture to occur. This is subject to the approval of the Engineer.

5.06.04 - Method of Measurement: This work will be measured for payment by the number of square yards of area from which the milling of asphalt has been completed and the work accepted. No area deductions will be made for minor unmilled areas such as catch basin inlets, manholes, utility boxes and any similar structures.

The depth of removal will be verified by taking a measurement every 250 feet per each pass of the milling machine, or as directed by the Engineer. These depth measurements shall be used to calculate the average depth of removal. This average depth will be used as the depth for payment.

5.06.05 - Basis of Payment: This work will be paid for at the contract unit price per square yard for "Milling of Bituminous Concrete". This price shall include all equipment, tools, labor, and materials incidental thereto.

No additional payments will be made for multiple passes with the milling machine to remove the bituminous surface.

No separate payments will be made for cleaning the pavement prior to paving; providing protection and doing handwork removal of bituminous concrete around catch basin inlets, manholes, utility valve boxes and any similar structures; repairing surface defects as a result of the Contractors negligence; providing protection to underground utilities from the vibration of the milling operation; removal of any temporary milled transition; removal and disposal of millings; furnishing a sweeper and sweeping after milling. The costs for these items shall be included in the contract unit price.

Pay Item	Pay Unit
Milling of Bituminous Concrete	SY

SECTION 5.07
INFRARED PAVEMENT RESTORATION

5.07.01 – Description: Under this item, the Contractor shall furnish all materials and equipment necessary to accomplish the infrared pavement restoration and sealing in existing street pavements cut be trenching operations under this Contract.

5.07.02 - Materials: The materials for the bituminous concrete mixture, tack or prime coat and joint sealer shall conform to the requirements of Section 4.06.02 and M.04 of the CTDOT Standard Specifications.

5.07.03 - Construction Methods: Infrared patching shall take place sixty (60) to ninety (90) days after the completion of the hot-mix permanent pavement repair.

The area to be restored shall be swept clean to remove all foreign material and the pavement cut back and squared off as necessary and a heavy coating of AC-20 applied to the trench seams. An approved Infrared heater will be placed over the area to be restored and left over this area for the time necessary to soften the existing pavement to a depth of two inches or more. Special care must be exercised to avoid oxidation of the pavement by use of improper heating techniques. If oxidation does occur, the bituminous concrete must be removed and suitable material replaced.

When the bituminous concrete has been adequately softened, it shall be scarified and raked to a workable condition. Surplus material will be removed. A hot bituminous concrete will be added, if required, and blended to the existing grade.

When the area has been properly prepared, it will be rolled by a minimum 10 ton roller to establish a uniform density comparable to that of the surface adjacent to the restored area. Depressions in the restored area will not be accepted.

The edges of the area restored will be sealed with RS-1 emulsion and on the area restored shall be spread a thin layer of fine sand.

Road boxes, manhole castings and grates within the limits of restoration shall be brought to grade with the finished bituminous pavement and road boxes, etc., flush. The Contractor shall be liable for any damage to road boxes, etc., that may be caused by any act, omission or neglect on his part and shall pay all cost necessary to repair such damage to the owner's satisfaction.

Upon completion, the work site shall be swept clean of any excess material and left in a condition acceptable to the Engineer.

An approved Infrared heated trailer will be used to store bituminous concrete. The bituminous concrete will be kept at a temperature of 175°F+. Under no conditions will bituminous concrete be added when the temperature registers under 175°F.

5.07.04 – Method of Measurement: This item shall be measured by the actual number of square yards restored and accepted.

5.07.05 – Basis of Payment: This work shall be paid for at the contract unit price per square yard for "Infrared Pavement Restoration". The contract price shall include all equipment, tools, materials, labor and work incidental to or necessary for the completion of the item. This payment shall also include any additional material or labor required for corrective work necessitated by settlement through the guarantee period of this Contract.

Pay Item	Pay Unit
Infrared Pavement Restoration	SY

SECTION 5.08
PAVEMENT MARKINGS, SYMBOLS AND LEGEND

5.08.01 – Description: This work shall conform to the requirements of Sections 12.09, 12.10 and 12.11 of CTDOT Standard Specifications.

Pay Item	Pay Unit
Painted Legend, Arrows and Markings	SF
Painted Pavement Markings (width) (color)	LF
Hot-Applied Painted Pavement Markings (width) (color)	LF
Epoxy Resin Pavement Markings (width) (color)	LF
Epoxy Resin Pavement Markings, Symbols and Legend	SF
Removal of Pavement Markings	SF

SECTION 6.01
TOPSOIL

6.01.01 – Description: This work shall conform to the requirements of Section 9.44 "Topsoil" of the CTDOT Standard Specifications.

Pay Item	Pay Unit
Furnishing and Placing Topsoil	SY

SECTION 6.02
LANDSCAPE PLANTING

6.02.01 – Description: All work under this item shall conform to Section 9.49 "Furnishing, Planting and Mulching Trees, Shrubs, Vines and Ground Cover Plants" of CTDOT Standard Specifications.

Pay Item	Pay Unit
(caliper) (deciduous tree name)	EA
(height) (evergreen tree name)	EA
(size) (shrub name)	EA
(size) (broad-leaved evergreen name)	EA
Vines (name)	EA
Groundcover (name)	EA
Wood Chip Mulch	SY
Gravel Mulch	SY

SECTION 6.03
TURF ESTABLISHMENT

6.03.01 – Description: This work shall conform to the requirements of Section 9.50 "Turf Establishment" of the CTDOT Standard Specifications, as amended below.

6.03.02 – Materials: Unless otherwise specified, the seed mixture shall conform to the following:

Variety	Proportion by Weight Percent	Min. Purity Percent	Min. Germination Percent
A 34 Kentucky Bluegrass	25	90	30
Georgetown Kentucky Bluegrass	25	90	30
Touchdown Kentucky Bluegrass	25	90	30
Palmer Perennial Ryegrass	8.33	90	90
Pennfine Perennial Ryegrass	8.33	90	90
Fiesta Perennial Ryegrass	8.33	90	90

Other improved seed varieties of similar type may be substituted upon approval of the Superintendant of Parks for the City of New Britain. All seed shall be subject to the testing provisions of the Association of Official Seed Analysts.

Pay Item	Pay Unit
Turf Establishment	SY
Erosion Control Matting	SY

SECTION 6.04
SODDING

6.04.01 – Description: All work under this item shall conform to Section 9.53 "Sodding" of CTDOT Standard Specifications.

Pay Item	Pay Unit
Sodding	SY

SECTION 7.01
SURVEY MONUMENTS & MONUMENT DISCS

7.01.01 – Description: Under this item the Contractor shall place and install standard New Britain survey monuments, each including a monument disk, and/or monument disks where a concrete monument is not required by the Engineer, at the locations shown on the plans or as ordered by the Engineer.

7.01.02 – Materials: The monuments shall be made with reinforced concrete and shall be in accordance with the City standard detail for the same. Unless otherwise approved by the Engineer, the monuments shall be as supplied by the City, and can be purchased through the Public Works Department and picked-up at the Public Works Yard on Harvard Street.

The standard bronze monument disks for the City of New Britain are manufactured by the Commercial Foundry Company, 150 Christian Lane, New Britain, Connecticut.

Epoxy shall be Colma-Dur-LV as manufactured by the Sika Chemical Corporation or approved equal.

7.01.03 - Construction Methods: The Contractor shall be responsible for having a Connecticut licensed Land Surveyor tie down the location of the monuments at locations shown on the plans. The standard monument shall be set to finished grade, allowed to settle and the licensed Land Surveyor will drill the new reference point into the face of the disc in the monument.

The Licensed Land Surveyor will layout the location for the disc for the Contractor and the Contractor shall drill the proper hole and epoxy the monument disc in place. After hardening of the epoxy, the Licensed Land Surveyor shall drill the new reference point into the face of the disc.

No monument disc will be installed in any walk surface which is less than fourteen (14) days old.

The Colma-Dur-LV compound shall be installed in accordance with the manufacturers recommendations. The Contractor shall clean all excess epoxy material from the walk surface.

7.01.04/05 - Method of Measurement and Basis of Payment: This item shall be paid for at the contract unit price bid for each monument or monument disc complete and approved in place which price shall include all materials, labor, excavation, processed stone furnish and place the monument or monument disc, locate the monument, equipment to drill the hole in the monument as specified.

Pay Item	Pay Unit
Survey Monument	EA
Survey Monument Disc	EA

SECTION 7.02
IRON PIN REPLACEMENT

7.02.01/02/03 - Description, Materials, Construction Methods: The following work shall be included for the above items:

Marking, referencing, reproducing and replacing all existing iron pin property corners by a Connecticut Registered Land Surveyor that may be disturbed by construction activities.

7.02.04/05 - Method of Measurement and Basis of Payment: The basis for payment for this item shall be the contract price bid per each iron pin replaced. The Contract price bid for this item shall include all equipment, tools, labor and materials incidental to satisfactory completion of this work as described herein and approved by the Engineer.

Pay Item	Pay Unit
Iron Pin Replacement	EA

CITY OF NEW BRITAIN
STANDARD SPECIFICATIONS FOR MUNICIPAL CONSTRUCTION

SECTION 2

ENGINEERING STANDARDS

DESIGN, SUBMISSION, AND POST APPROVAL

ACTIVITIES FOR CAPITAL PROJECTS

AND PROJECTS REQUIRING

SITE PLANS

I General

A. Authority. These standards are established in accordance with Section 280-60 of the Zoning Ordinances of the City of New Britain, the Subdivision Regulations of the City of New Britain, and Chapter 21 of the Code of Ordinances of the City of New Britain. The standards shall be updated as required.

B. Excluded items. Items not specifically covered by these standards but, in the judgment of the City Engineer, required to insure compliance with the intent of the Zoning, Subdivision, or other applicable ordinances, regulations, standards, and policies shall be specifically identified in writing during the plan review process and shall be considered to be binding.

C. Conflicts. Any conflicts between these standards and any other statute, ordinance, regulation, standards, or policies shall be brought to the immediate attention of the City Engineer for resolution.

D. Waivers and Variances. Waivers and variances from these standards must be requested in writing. It is strongly advised that such requests be made at the earliest reasonable point in the planning and design process. The letter of request should explicitly state the standard to be waived/varied, the grounds for the request, and the alternate proposed, including any mitigating measures.

E. Improvements. All improvements are to be designed and constructed in conformance to the current edition (including revisions), of the City of New Britain Standard Specifications for Municipal Construction current at the time of plan approval and this document, unless otherwise noted below or specifically agreed to in writing by the City Engineer. (The City of New Britain Standard Specifications for Municipal Construction are available at the Engineering Division of Public Works for review or purchase.)

F. Plan approvals. Approval of plans by the City Engineer (among others) is required prior to the start of construction. The City Engineer's approval indicates that the plan generally appears to conform to the City's engineering standards but in no way shall be construed as confirmation of the technical accuracy or adequacy of the contents of the plan and shall not relieve the owner of the obligation to construct facilities which function safely and correctly, and in conformance with applicable statutes, ordinances, and regulations.

G. Plans contemplating phased development must clearly identify the boundaries and contents of each phase. Each phase must function as a self-contained entity meeting, on its own, all requirements of these standards.

H. Persons using this document are urged to contact the Engineering Division of Public Works regarding any questions they may have on its application or

interpretation. It is highly recommended that such communications be made early in the planning and design stages.

I. All plans submitted to the City must be signed and sealed. Site grading plans and utility designs must be signed and sealed by a Connecticut Professional Engineer. Plot plans and boundary surveys must be signed and sealed by a Connecticut Land Surveyor. Structural designs must be signed and sealed by a Professional Engineer with those special qualifications.

II Design Standards

These design standards are considered a minimum applicable to all projects. A higher standard may be required in circumstances where the City Engineer determines that protection of the public good and the City's interest warrant greater stringency. When, in the opinion of the design professional, specific conditions make adherence to a particular criterion inappropriate, he shall request, in writing, a variance in accordance with section I.D. of this document.

A. Grading

Grading requirements are given below. Where variance is proposed from these requirements, plans must address specific additional measures for slope stability, maintenance, erosion control, etc.

1. Maximum earth slopes shall not exceed 2 to 1. (2 horizontal to 1 vertical.)

2. Graded areas shall have a minimum aggregate grade of 0.5% for paved/impervious areas and 1.0% for unpaved areas.

3. No slope 3:1 or steeper shall terminate within 10' of a building foundation if the vertical rise of the slope is greater than 4.0', or within 5.0', if the vertical rise is 4.0' or less.

4. Area adjacent to buildings should slope away for a minimum of 20'.

5. Graded areas shall not alter drainage patterns, and shall not result in increased flooding on adjacent properties.

6. Graded areas shall not extend into wetlands without Conservation Commission or Army Corp. of Engineering approval, when necessary.

B. Storm drainage

1. Design criteria. Flows from both minor (10 year) and major (10+ to 100 year) storm events must be considered in storm drainage design and documented in a drainage study. For larger developements, storm

flows from 10 year events shall not be permitted to overflow sidewalks and driveways but must be detained on site or diverted to the storm sewer system through on-site structures. Storm flows in excess of those created by 10 year storms should be disposed of via surface drainage designed to minimize on-site and downstream property damage and erosion.

2. Drainage studies and design computations. In general, a rational method shall be used to size storm sewers. Designer shall refer to the current version of the CTDOT Drainage Manual for technical reference. Sizing of drainage pipe shall be based on a 10-year design storm. Hydraulic grade line calculations using HEC-22 are required and 2' of freeboard must be maintained below the frame/grate elevation. Gutter flow calculations are required when designing roadway drainage systems. Ponding calculations are required at all low points. The flow computations and sizing of both surface and subsurface facilities shall consider all drainage areas contributing to the site whether within the proposed development or outside of it. The effects of storm flows on downstream properties and City drainage facilities, whether through existing or newly created drainways, must be examined and documented in the drainage study.

3. Surface Flow

a. Drainways (e.g. swales, gutters, or ditches)

i. The paths of concentrated surface flows (i.e. surface flows other than sheet flow), including runoff that will enter the storm sewer system, shall be via designed drainways.

ii. Drainage easements are required wherever drainways service more than one lot or cross other lots to the point of discharge.

iii. Drainway designs must include a check to see if the maximum major storm flows can be accommodated without major property damage or excessive erosion.

iv. The elevation of the flowline of a drainway at any point within 30' of a building foundation, measured perpendicular to the foundation, shall be a minimum of 0.2 feet less than the corresponding finish grade at the foundation.

v. Swales and ditches shall be lined with appropriate erosion control matting.

vi. Design shall ensure that gutter flow does not flood more

that one-half of one travel lane for the design storm.

b. Sheet Flow

Wherever practical, grassed and paved areas adjacent to sidewalks should be sloped back from the streetline to prevent minor storm flows from flowing across sidewalks.

4. Detention Systems

Storm facilities shall be designed to not increase peak flow discharges from the project, unless otherwise approved by the City Engineer.

5. Stormwater Treatment Systems

Drainage systems shall be designed to incorporate Best Management Practices type features including stormwater treatment systems. Plans describing proposed type, size and treatment method, pertinent data and calculations etc., shall be submitted for approval. A demonstration meeting with the manufacturer may be required.

6. Storm sewers

a. General.

i. All storm sewer facilities which connect to the City of New Britain storm drainage system shall be constructed to the City of New Britain Standard Specifications for Municipal Construction.

ii. All storm sewer facilities within City right-of-ways (ROW) shall be designed to carry an HS-20 loading.

b. Pipe

i. The City will allow reinforced concrete pipe (R.C.P.) and polyvinyl chloride pipe (P.V.C.), that conforms to the NB Standard Specifications, for storm water systems. All storm sewer pipe including laterals with the exception of roof, yard drain, and foundation drain laterals shall have a minimum 12" diameter. Roof and yard drain laterals shall have a minimum 6" diameter.

ii. Minimum allowable slopes. 0.5%

iii. Minimum depth of cover. 2 ft. over crown of pipe.

c. Connection to mains

i. Regardless of main size, connections of laterals serving individual yard drains or catch basins with any number of roof or foundation drain leaders shall be made by constructing a standard manhole, unless approved by the City Engineer.

ii. Connection may be made to an existing City storm manhole provided that the invert of the connecting pipe enters at an elevation no higher than two feet above the manhole invert.

d. Catch Basins, Yard Drains and Roof Drains

i. Catch basins and yard drains within the property must be designed so that runoff is prevented from going over the sidewalk. Typically, this requires surface grading to create a sump around the basin/drain grate. Yard drains may be used for draining grassed areas of less than 5000 sf. Roof drains are prohibited from discharging onto or across sidewalks. Likewise, the discharge from roof drains into parking areas should be done at points subject to no or only infrequent pedestrian use.

ii. Catch basins and yard drain laterals having more than one 22 ½ degree bend shall have a cleanout or standard manhole at each change in horizontal or vertical alignment.

iii. A series of up to three catch basins can be connected together before tying system into a manhole.

e. Manholes.

i. Manholes shall be installed on main lines at every change in horizontal or vertical alignment.

ii. Drop manholes with drops of more than 2.0' from pipe invert to manhole flowline are prohibited.

iii. Inverts or branch sewers connecting to trunkline sewers (trunkline defined as any sewer exceeding 24" in diameter)

shall enter manholes at the elevation of the top of the trunkline sewer. (Considered to be flowline.)

iv. Maximum distance between manholes shall not exceed 300 ft.

f. Other considerations.

i. Swimming pool drains and backwash filters shall not be connected to the storm sewer system nor dry wells. (This effluent is considered as waste water and must be piped into the sanitary sewer system.)

ii. Where surface streams enter into conduits or storm lines discharge into streams, properly designed inlet and outlet structures shall be required.

iii. Isolated storm sewer systems servicing parking areas and discharging directly into high quality streams or wetlands shall be equipped with oil/water separators.

C. Gravity Sanitary Sewer.

1. General.

a. All sanitary sewer facilities which connect to the City of New Britain sanitary sewer system shall be constructed to the City of New Britain Standard specifications for Municipal Construction.

b. All sanitary sewer facilities within City right-of-ways (ROW) shall be designed to carry an HS-20 loading.

2. Design Criteria.

a. For purposes of calculation, the top of sewer mains shall be assumed to be the flow line.

b. Sewer mains shall be sized to flow half full while accommodating the flows associated with peak development of the final service area, but in no case shall they be smaller than 8" in diameter.

3. Sanitary sewer mains.

a. Size. Minimum 8".

b. Slope. Minimum slope on 8" mains is 0.4%. Larger size mains shall be laid at slopes adequate to maintain a minimum velocity of 2 FPS when flowing full or half full.

4. Laterals.

a. Size. Sewer laterals shall be sized according to estimated flows but in no case less than 6" in diameter (per ordinance).

b. Slope. Laterals shall be laid at a minimum 1.0% slope.

5. Connections at mains.

a. For connections of 6" laterals to sewer mains, manufactured wye connections shall be used except as noted below.

b. Connections of 6" laterals serving 10 or more dwelling units, of laterals larger than 6", or of mains shall utilize a manhole.

6. Manholes.

a. Manholes shall be installed on sewer mains at every change in horizontal or vertical alignment.

b. The use of drop manholes requires approval from the City Engineer..

c. Inverts of sewers connecting to trunkline sewers (defined as sewers 24" or larger in diameter) shall enter manholes at the elevation of the top of the trunkline sewer. (Considered to be flowline.)

d. Maximum distance between manholes shall not exceed 300 feet.

7. Other

If sanitary sewer is not available then approval of a septic tank system must be obtained from the Health Department.

D. Curbing, curb cuts, driveway aprons, and sidewalks. All curbing, curb cuts, driveway aprons, and sidewalks shall be designed and constructed in

accordance with the edition of the City of New Britain Standard Specifications for Municipal Construction current at the time of plan approval.

1. Curbing.

   a. Granite curbing shall be used in the Downtown District and other commercial areas, subject to the approval of the City Engineer. In all other areas, concrete curbing shall be used.

   b. Curbing in private parking lots shall be constructed as required to control drainage and protect pedestrians. At a minimum, a 6" curbing reveal is required on the parking lot perimeter.

   c. Use of any other curbing requires approval of the City Engineer.

2. Curb Cuts

   a. Curb cuts/drives at street line shall be a minimum of 10' in width and a maximum of 20’. For curb cuts/drives wider that 20', approval is required from the City Engineer.

   b. Wherever concrete sidewalk exists, is proposed, or is required, concrete driveway aprons shall be constructed for all active driveways. This requirement remains unaffected by the lack of curb or material or condition of existing curb.

   c. In residential areas, driveway aprons should typically be constructed to the City standard detail showing a 4.0 foot radius on the returns. On commercial or industrial sites, alternative driveway apron/curb cut configurations may be proposed if appropriate for projected traffic, design vehicles, etc. Non-standard aprons/curb cuts are subject to approval by the City Engineer.

   e. Whenever proposed development results in the abandonment or discontinued use of a curb cut and/or driveway apron, the curb cut and/or driveway apron shall be removed and replaced with standard walk and curb.

3. Sidewalk.

   a. Within City ROW. In subdivisions, sidewalks shall be

constructed on all abutting City streets unless waived by the City Engineer and other appropriate City agencies. For other sites, sidewalks in the adjacent ROW shall be installed or repaired in accordance with the Engineering/Public Works joint "Policy for the Construction/Repair of Sidewalks / Curbs", latest edition. Typically, for 50' ROW's, minimum five foot wide walks shall be constructed 1' off the street line. Monolithic curb and walks covering the snow shelf may be required depending upon the character of the neighborhood and planned or existing adjacent development.

b. Interior walks. For all development other than single family housing and industrial, interior walks shall be of portland cement concrete. Bituminous concrete interior walks are permitted on single family and industrial sites although not recommended.

E. Roadways, Driveways, Parking Lots.

1. Roadways.

a. Geometrics. Road geometrics should generally conform to the latest edition of the CTDOT Highway Design Manual and the AASHTO Green Book, "A Policy on Geometric Design of Highways and Streets" and are subject to the approval of the City Engineer.

b. Pavement design. The "Typical Cross Section" detail included in the City of New Britain Standard Specifications for Municipal Construction is a minimum standard for roadway construction. For capital projects and large development projects, this standard shall be supplemented based on results of geotechnical investigations and approval of the City Engineer.

c. Construction. Construction of all roadway facilities within public right-of-ways shall conform with the City of New Britain Standard Specifications for Municipal Construction.

2. Driveways.

a. Definition. The vehicle path from street line to garage door or designated parking area.

b. Material shall be bituminous concrete or portland cement concrete pavement.

c. Dimensions, grades and alignment.

i. The maximum allowable grade on a driveway allowing parking of vehicles on the side is 8%. (Defined as an aisle.)

ii. The maximum allowable grade on a driveway with parallel parking prohibited is 12%.

iii. Driveways shall be a minimum of 10' wide and a maximum of 20’ wide. Driveways wider than 20’ require approval from the City Engineer

iv. Maximum cross slope on drives shall not exceed 3.5%.

3. Parking Lots

a. Material shall be bituminous concrete or portland cement concrete pavement.

b. Parking lots shall be designed to provide safe and efficient flow for vehicles and pedestrians.

c. Traffic flow in parking lots must be designed to accommodate current New Britain Fire Department ladder truck turning radius.

d. When parking spaces are angled, 45° is preferred. Only one-way traffic patterns are allowed when angled parking spaces are proposed.

e. Parking aisle shall be a minimum of 22’ wide for two-way traffic.

f. Handicapped parking spaces shall be designed and built to meet current applicable ADA and Building Code standards.

F. Miscellaneous.

1. Guide Rail shall be required at the top of slopes, stream embankments, retaining walls and wing walls of culverts with drops in excess of 48" or near pedestrian or vehicular traffic. Refer to current CTDOT Highway Design Manual for guiderail design requirements.

2. Wall - Retaining walls with any portion over 48" in height, or those

of lesser height judged by the City Engineer to be critical to life and safety, require a design submission, including calculations, sealed by professional engineer licensed in the State of Connecticut.

III Plan submissions

A. General

1. The following requirements for plan submissions are considered minimums. The applicant has the responsibility for furnishing sufficient information to allow determination of conformance with the City's ordinances, policies, and standards. Upon request, the applicant shall also furnish any additional information required by the City for its review.

2. All approved waivers and variances must be identified on plans. Copies of the approvals must accompany the plan submission.

3. Permits. Plans must specifically identify if permits from state, federal, or other agencies (e.g. ConnDOT, DEP, Corps of Engineers, Conservation Commission, etc.) are required for any portions of the proposed work. Copies of all permit approvals shall be submitted to the Engineering Division of Public Works as soon as possible but, in no case later than the start of construction.

4. Certification. Plans, revised plans, as-built plans, designs, and surveys must be dated, sealed and signed by a Professional Engineer or Land Surveyor in accordance with State statutes. Each individual plan sheet must have a live seal(s) and signature(s).

5. Revisions. All changes to proposed plan submissions or to approved plans, except for minor deviations or field changes as defined in the "Developer's Letter Agreement", require a revised plan submission. The submission must be accompanied by a letter clearly describing each revision and indicating why the revision was made. Additionally, all revisions must be "bubbled" or similarly indicated on the revised plan sheets and the date of each specific revision clearly indicated. All revisions must conform to these standards.

B. Site Plan format.

1. Drawing size. All plans shall be submitted on one of the following sizes as appropriate: 12" x 18", 18" x 24", or 24" x 36".

2. Drawing scale. Drawings shall be at a scale of 1"=40' for parcels exceeding 4 acres. For smaller parcels scaled of either 1"=20' or 1"=10' shall be used as most appropriate. The scale selected and the number of plan sheets shall allow for clarity and the proper interpretation of information.

3. A legend shall be provided.

4. A title block shall be provided on each sheet showing:

   a. The name and street address of the project.

   b. The name of the owner.

   c. The name(s) of the sealing design professionals.

   d. Date of latest revision for each sheet.

   e. Page or drawing number.

5. Other.

   a. North arrow shown on sheet containing survey information

   b. Each sheet numbered.

   c. Vicinity map.

   d. Zoning District and Site Plan Data as required by the subdivision regulations and/or in accordance with the City Plan Commission's standard format.

C. Boundary data.

1. Property line survey. Length and bearing of each line is required.

2. Right-of-ways/easements.

   a. Length and bearing of each line is required. Bearings should be for a traverse in a clockwise direction.

   b. Locate the points where the R.O.W. hment line crosses property lines and street lines, (with tied distances from property corners or mere stones).

   c. Intended use of ROW/easement shall be identified. If

3. Other. Significant features such as existing buildings/structures, all utilities, fences, walls, streams, wetlands, trees with BHD (breast height diameter) greater than 12", etc. shall be located on the plan.

4. The map and survey shall be certified to class A-2. All property corners must be set before a building permit can be issued.

5. The map and survey shall conform to Sections 20-300b-1 to 20-300b-20 inclusive of the Regulations of Connecticut State Agencies - Minimum Standards for Surveys and Maps.

D. Topographic data and grading.

1. Elevation datum. All elevations are to be on the City datum. The datum used must be clearly noted on all sheets.

2. Contours and elevations.

a. Existing and proposed contour lines are required unless area has, or will have, less than 3 feet total elevation difference from the highest to the lowest point. In such cases, spot elevations (actual and proposed) are sufficient.

b. Contour lines must extend either 25' into adjacent properties or a distance sufficient to define drainage patterns and other significant features on adjacent properties, whichever distance is greater and should be at no more than 1' intervals.

c. Clearly label all spot elevations and contours as either existing or proposed.

d. If walls are proposed, specify elevations of the top and bottom of wall at each end, at the mid-point of the wall, and at all grade changes.

e. Show proposed ground elevations at corners of building(s).

f. The adopted street line grade (see Engineering Division of Public Works profiles for each street) should be given at intervals of 25 ft., at each side of driveways, and in the middle of driveways more than 10' wide, and at each property corner. If there is no adopted streetline grade, provide proposed three level profiles in accordance with

standard City format and based upon the City's typical street section.

3. Certification.

a. The topography shall be certified as to its degree of accuracy. Class D is unacceptable for projects that include site grading.

b. The map and survey shall conform with the publication listed in III.c.5. above.

4. Other. If sloping is required onto adjacent property, a copy of the slope right agreement must be submitted with the plan. Reference shall be made to this agreement on the plan. (Restoration conditions of the area as specified in the agreement shall be stated on the plans.)

E. Storm drainage.

1. Information to be shown on plans.

a. Size, length, type, and slope of each pipe from catch basins and between manholes. For new or reconstructed mains, profiles must also be submitted.

b. Elevations for top of frame and inverts for all proposed and existing manholes and catch basins. Frame elevation only for yard drains.

c. All roof drains and foundation drains-type, size, location and where connected to the storm sewer.

d. All invert elevations at junctions of laterals and main lines.

e. Details of all inlet/outlet structures, including rip rap, energy dissipaters, etc.

f. Location, dimensions, and cross sections for all designed drainways (e.g. swales, gutters, or ditches).

g. The paths of surface flows, if not readily apparent from the contour information.

h. Storm drainage easements for both underground conduits and surface flows.

i. Relevant City Standard details for all storm drainage facilities construction, e.g. manholes, trenching, etc.

2. Drainage studies.

a. Copies of the drainage study, including design computations and a statement on the impact of major storm flows on structures within the proposed area of development and on adjacent properties, must accompany the plan. This study must be signed and sealed by a Professional Engineer.

3. Permits and Approvals. Where the storm sewer system is proposed to be connected to an existing CTDOT drainage system, approval from CTDOT must be obtained and a copy submitted with the plan.

F. Sanitary sewers.

1. Information to be shown on the plans.

a. Size, length, type, and slope of each pipe between manholes. For new or reconstructed mains, profiles must also be submitted.

b. Elevations for top of frame and inverts for all proposed and existing manholes.

c. All invert elevations at junctions of laterals and main lines.

d. Easements.

e. Relevant City Standard details for all sanitary sewer facilities construction e.g. manholes, trenching, etc.

2. Permits and approvals. Drawings for septic systems approved by the Health Department must be submitted with the plan.

G. Streets, Driveways, Interior/Exterior Walks and Curbing, Parking Lots

1. Information to be shown on plans.

a. For new street construction, plan and 3 level profiles.

b. Proposed pavement sections.

c. Relevant City Standard details for all facility construction

d. If a variance or waiver has been approved, alternate materials (e.g. brick, concrete, or asphalt pavers, etc.) or deleted facilities shall be clearly identified on the plans. A copy of the approved waiver or variance must accompany the submission.

2. Permits, approvals, and other documentation. Attach any pertinent geotechnical and traffic data relating to paving section design.

H. Structures.

1. Information to be shown on the plans.

a. Buildings.

1. Show the basement floor elevation.

2. Sufficient information must be provided to accurately locate each building foot print in relation to the property lines. Generally, this would be accomplished by locating two corners of each building from a property corner with angles and distances or locating one corner of the building from a property corner and providing building offset data. Locating one building from another is not acceptable when multiple buildings are involved.

b. Other structures.

1. Retaining wall details and location shall be shown with footing to assure wall is entirely on property of site being reviewed.

2. Location and purpose of all other proposed structures shall be included in the plan.

2. Permits, approvals, and other documentation. Retaining walls with any portion over 48" in height require a design submission, including calculations, sealed by a registered professional engineer licensed in the State of Connecticut.

I. Exterior lighting and landscaping must be shown on plans. Plans shall also

include a “Landscaping Data Chart” as required by City Plan.

IV Post-Approval Activities.

A. Compliance monitoring and inspections.

1. Engineering personnel may enter the premises at any reasonable hour to monitor compliance with approved plans and applicable ordinances, laws, regulations, and policies.

2. Three inspection visits for Permanent or Temporary Certificates of Occupancy shall be made to the site by Engineering personnel at no cost to the permittee. Additional CO/TCO inspections, if required, shall be billed to the permittee at the applicable standard, overtime, or holiday rates, with markup, for actual hours worked. Permanent CO’s shall not be issued until charges for additional inspections are paid in full. No CO/TCO inspections shall be made until such time as as-built drawings are submitted and property corners are set.

3. Compliance monitoring and inspections are solely for the City’s benefit. The responsibility for quality control and conformance to plans and specifications of all constructed work remains solely the responsibility of the permittee.

B. As-built plans and certification of compliance. Prior to any request for a Permanent or Temporary Certificate of Occupancy, as-built plans must be submitted which accurately show the final, as-constructed conditions. All as-builts shall be in strict conformance with the Engineering Division of Public Works standards for as-builts. In addition, the owner and/or the appropriate design professionals shall sign a certificate of project compliance as per the attached form and submit this with the as-built drawings.

SECTION 3

REQUIREMENTS FOR AS-BUILT MAPS

GENERAL

The City of New Britain requires that a survey be made and a map be drawn to show the existing positions of improvements following completion of construction in streets, site construction or subdivision improvements. For site, subdivision and plot plans, the as-builts must be delivered prior to a request for occupancy. For road work and utility construction (not performed as part of site or subdivision improvements) as-builts are due at final inspection. They must be prepared in compliance with Sections 20-300b-1 to 20-300b-20 inclusive of the Regulations of State Agencies "Minimum Standards for Surveys and Maps". The requirements for these as-built maps vary somewhat with the nature of the project but all of the as-built surveys must be signed and sealed by a licensed surveyor. In addition to the survey, the City Engineer may require a report from the project architect or engineer that addresses the project's completeness, adherence to design and construction integrity. For subdivisions and any project in which site work is performed, this report is mandatory, for other projects it will be decided on a case by case basis.

SANITARY SEWER AND STORM DRAIN "HUB" MAPS

These maps must be drawn on 10" x 25" 0.4 mil mylar sheets, provided by the Engineering Division of Public Works. The horizontal scale must be 1"=40'. The vertical scale must be 1"-10' and based on the City of New Britain datum. The maps must show all new work, all existing pipes abandoned or reconnected, all rock encountered and all pipes crossed. Elevations should be shown on crossed pipes. The size and material of all pipes must be shown. The plan portion must show street lines, lot lines and house numbers from Engineering Block Maps (if available) and the profile must show existing paving over the pipe. The maps must have distances or stations from the nearest manhole to each lateral. Elevations must also be shown on all tops of frame and all inverts. The maps should be signed as being class A-2 by a licensed surveyor but under certain circumstances B will be acceptable. The surveyor or contractor should discuss with Engineering what class of survey is required before the map is submitted. Class D. is not acceptable. Examples of these maps may be viewed in the Engineering Department.

SUBWAY MAPS

Subway maps must be prepared on mylar sheets that are 24" by 36". The scale must be 1"=20'. The maps must show all new work plus appurtenances abandoned or reconnected. The size and material of the conduit must be shown along with the dimensions and layout of the vaults. They must also show street lines, lot lines and house numbers as taken from the Engineering Block Maps. Elevations are required on the tops of frame of the manholes and on all grade breaks on the conduit. Elevations must be based on the City of New Britain datum. These maps must be signed and sealed by a licensed land surveyor, Class B is acceptable.

WATER MAPS

Water maps must be drawn on mylar sheets that are 14”x36” at a scale of 1”=40’. They must show all mains, valves, valve boxes, meter pits, hydrants, blowoffs and laterals of all existing and new work on the project area. The size and material of the pipe must be shown. All points where the pipe has less than 4.5’ of cover must be noted. All points where the pipe has more than 5 feet of cover must be shown. In addition, the maps must show street lines, lot lines and house numbers as taken from the Engineering Block Maps. Elevations must be based on the City of New Britain datum. These maps must be signed and sealed by a licensed land surveyor, Class B is acceptable.

STREET PLAN AND PROFILE

Plan and profile maps must be drawn on mylar sheets no greater than 24” x 36” in size. The horizontal scale must be either 1”=40’ or 1”=20’, the vertical scale must be 1”=4’. The plan portion of the map must show all street lines with bearings, distances, PCs, PTs, horizontal and vertical curve geometry and center line stationing. All street line monuments must be noted as being set. Lot lines and lot numbers or addresses for all lots that abut the street must be shown. All waivers of street line grade must be noted. The plan portion of the map must be certified A-2 by a licensed land surveyor.

The profile section of the map must show existing pavement grades at centerline and street line grades. Cross sections must be shown for parts of the road that do not conform with City typical street section. The profile must show the percent of slope at center line and street line and show center line stations. Spot elevations must be shown for center line, and street line every fifty feet, on station, unless the road is in a vertical curve, the spot grades must be shown every twenty-five feet on station. Grades must also be shown for the PVC, PVT, PVI and low or high point. Elevations are based on the City of New Britain datum. The profile must be signed as being A-2 or T-2 by a licensed land surveyor.

SITE DEVELOPMENT

A revised site or subdivision plan showing as-built conditions must be submitted. The map must show all improvements, including paving, curbing, parking, lighting, landscaping, buildings, retaining walls, drainage swales, utilities and any other constructed features. Buildings must be dimensioned to the property lines.

Elevations, based on the City of New Britain datum, must be shown for all inlets, inverts, tops of frame, and flow lines of catch basins and manholes. All utilities must be shown as-built. As-built topography or spot elevations must be shown at the same density as the approved site/subdivision plan. The map must be signed as being A-2 by a licensed land surveyor.

PLOT PLAN AS-BUILT

As-built maps for residential projects that have approved plot plans must be at the same scale as the plot plan and cover the same area. The map must show the existing building with dimensions to the property lines along with street line grade. Driveways with cross pitch and street line grades must also be shown. The map must contain the same information, in as-built form, as the approved plot plan and be signed as being class A-2 by a licensed land surveyor.

CITY OF NEW BRITAIN
STANDARD SPECIFICATIONS FOR MUNICIPAL CONSTRUCTION

SECTION 4

STANDARD DETAILS

N:\Shared Documents\Public Works\Library\Standard Details\Details-ACAD\Section 1\det 1-1 typ road.dwg

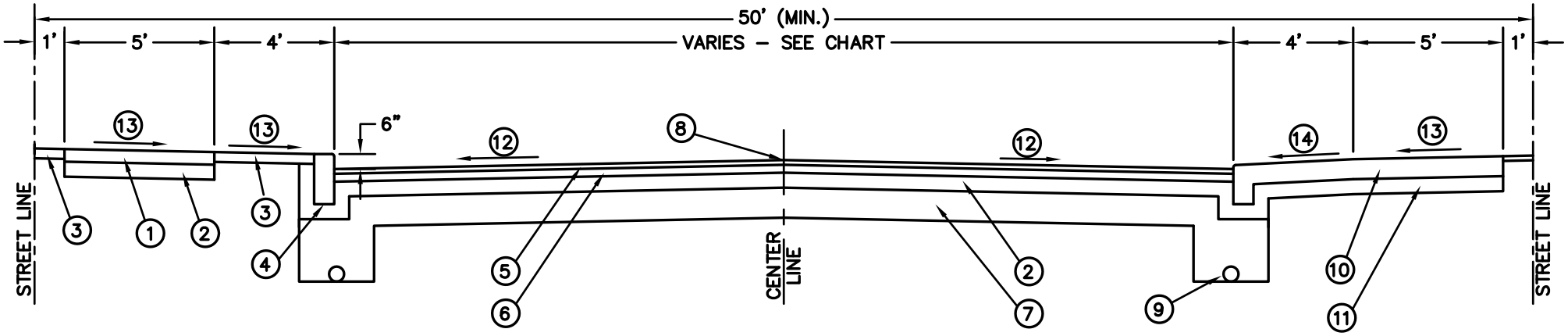

NOTE:
PAVEMENT STRUCTURE MAY VARY BASED ON EXISTING CONDITIONS AND/OR GEOTECHNICAL STUDY, AS APPROVED BY THE CITY ENGINEER.

ROAD CLASSIFICATION CHART

ROAD CLASS	CROSS SLOPE	LANE WIDTH	SHOULDER WIDTH	PARKING WIDTH
LOCAL	3%	11'	2' (1' W/PARKING)	8'
COLLECTOR	2%	12'	4' (2' W/PARKING)	8'
ARTERIAL	2%	12'	6' (2' W/PARKING)	8'

LEGEND

1. 5" CONCRETE SIDEWALK
2. 6" PROCESSED AGGREGATE BASE
3. 4" TOPSOIL & TURF ESTABLISHMENT
4. CONCRETE OR GRANITE CURBING – VARIES PER LOCATION
5. 2 ½" SURFACE COURSE (BIT. CONC. CLASS 1 OR SUPERPAVE 0.50")
6. 2 ½" BINDER COURSE (BIT. CONC. CLASS 1 OR SUPERPAVE 0.50")
7. 12" SUBBASE ON COMPACTED SUBGRADE
8. POINT OF APPLICATION OF GRADE
9. 6" UNDERDRAIN (TYP.)

LEGEND (CONT.)

10. 8" CONCRETE DRIVEWAY RAMP (6" FOR RESIDENTIAL) WHERE CONC. WALKS ARE REQUIRED, OR 3" CLASS 1 BIT. CONC. ON 8" PROCESSED AGGREGATE BASE WHERE THERE ARE NO WALKS
11. 8" PROCESSED AGGREGATE BASE
12. VARIES – SEE CHART
13. 2% SLOPE
14. VARIES – REFER TO DRIVEWAY RAMP DETAIL

TYPICAL CROSS SECTION
NOT TO SCALE

DRAWN BY:	MJB
DATE:	04/08/08
APPROVED BY:	MEM
DATE:	05/05/08

CITY OF NEW BRITAIN
DEPARTMENT OF PUBLIC WORKS
STANDARD DETAIL

N:\Shared Documents\Public Works\Library\Standard Details\Details-ACAD\section 1\det 1-2 utility locations.dwg

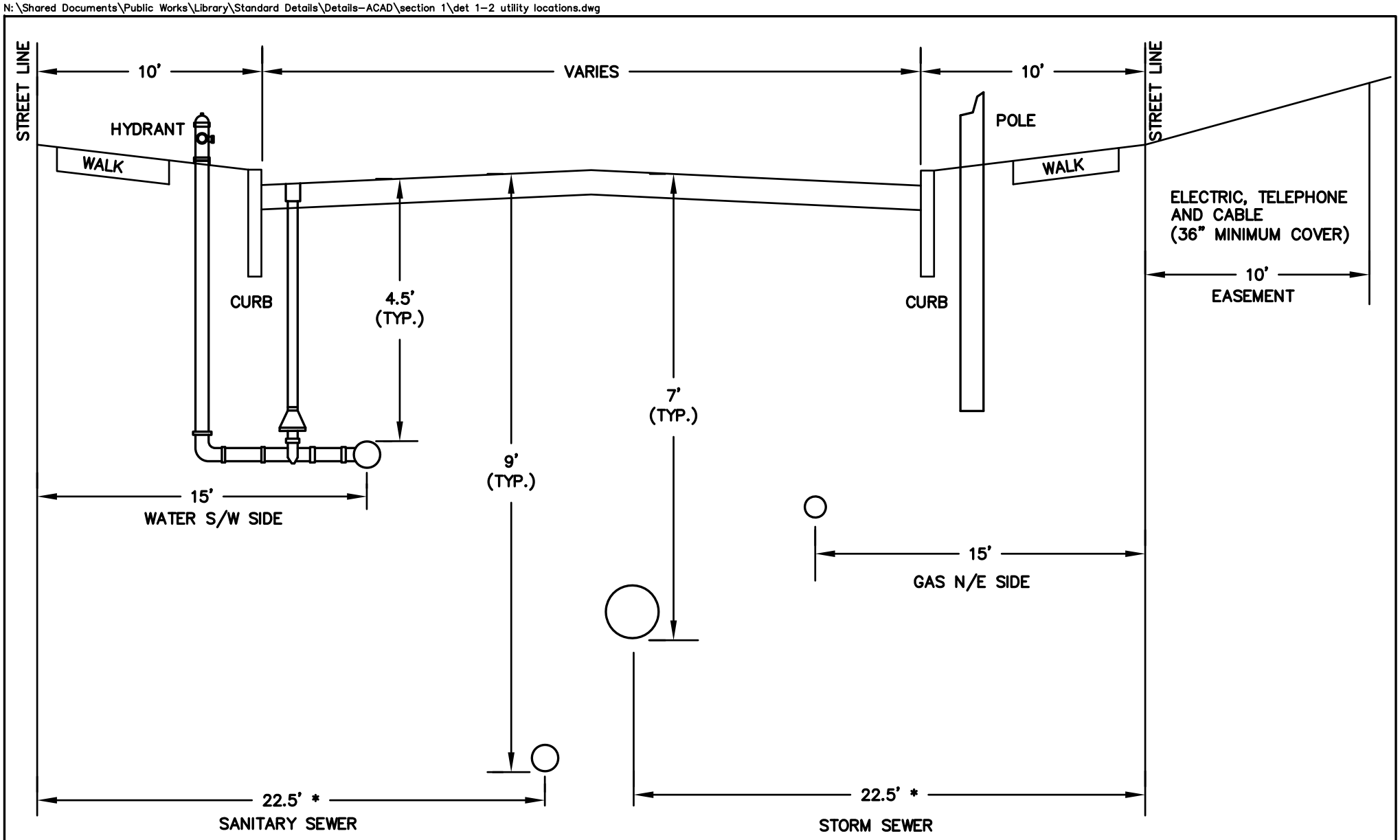

SECTION SHOWING UTILITY LOCATIONS
NOT TO SCALE

* 23' IF BOTH SEWERS ARE INSTALLED AT THE SAME TIME.

DRAWN BY:	MJB
DATE:	03/04/08
APPROVED BY:	MEM
DATE:	05/05/08

CITY OF NEW BRITAIN
DEPARTMENT OF PUBLIC WORKS
STANDARD DETAIL

TRENCH NOTES

1) EXAMPLES OF FLEXIBLE PIPE ARE P.V.C. AND H.D.P.E.

2) H.D.P.E. PIPE SHALL ONLY BE USED WITH APPROVAL FROM THE CITY ENGINEER.

3) THE GEOTEXTILE SHALL BE FITTED AROUND MANHOLES AND EXTEND 1' UP THE MANHOLE. ALL LAPS SHALL BE A MINIMUM OF 18".

4) FOLLOW PROCEDURES AND SPECIFICATION IN ASTM D2321 AND ASTM D3034 SDR35 FOR 6"– 15" AND ASTM F679, TYPE 1, SDR35 FOR LARGER PIPE.

5) ALL NEW SANITARY AND STORM INSTALLATIONS SHALL BE TELEVISED.

6) IN AREAS WHERE THE PIPE IS LOCATED WITHIN ROCK EXCAVATION, THE GEOTEXTILE NEED ONLY BE PLACED ALONG THE TOP OF THE 3/4" CRUSHED STONE, EXTENDING UP 6" ALONG EITHER SIDE OF THE TRENCH.

7) IN CASES WHERE PIPE MANUFACTURER'S RECOMMENDATIONS ARE DIFFERENT FROM THIS DETAIL CONSULT WITH CITY ENGINEER FOR APPROVAL.

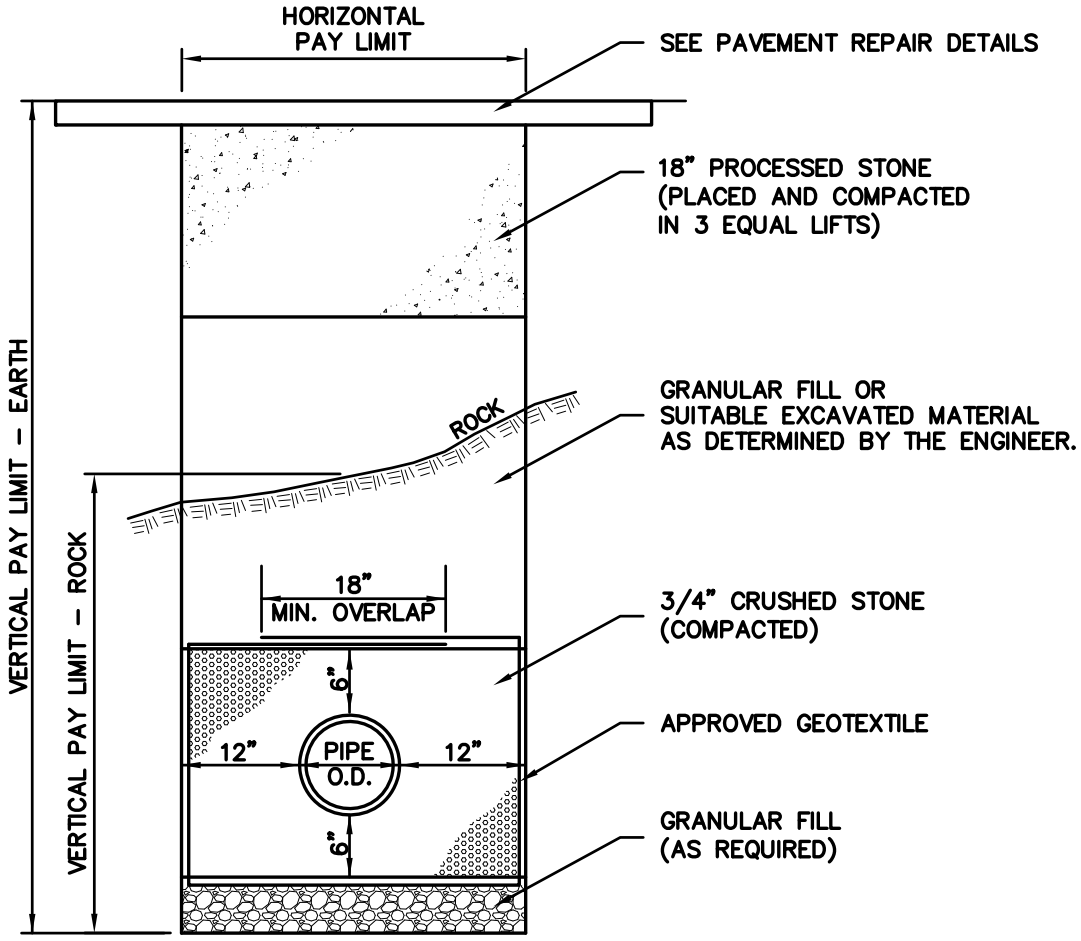

STORM AND SANITARY SEWER
TRENCH EXCAVATION AND BACKFILL – FLEXIBLE PIPE
NOT TO SCALE

DRAWN BY:	MJB	CITY OF NEW BRITAIN DEPARTMENT OF PUBLIC WORKS STANDARD DETAIL
DATE:	04/08/2008	
APPROVED BY:	MEM	
DATE:	03/19/08	

N:\Shared Documents\Public Works\Library\Standard Details\Details-ACAD\Section 2\det 2-1 trench exc flexible pipe.dwg

TRENCH NOTES

1) EXAMPLES OF RIGID PIPE ARE R.C.P. AND D.I.P.

2) ALL NEW SANITARY AND STORM INSTALLATIONS SHALL BE TELEVISED.

3) PIPE BEDDING SHALL CONFORM TO SECTION 2.09 "GRANULAR/SAND CUSHION"

BEDDING TYPE	PIPE SIZE	DEPTH BELOW PIPE	HEIGHT ABOVE INV.	HEIGHT ABOVE TOP
I	LESS THAN 48"	4" (EARTH) 12" (ROCK)	25% PIPE O.D.	–
II	48" AND LARGER	4" (EARTH) 12" (ROCK)	–	12"

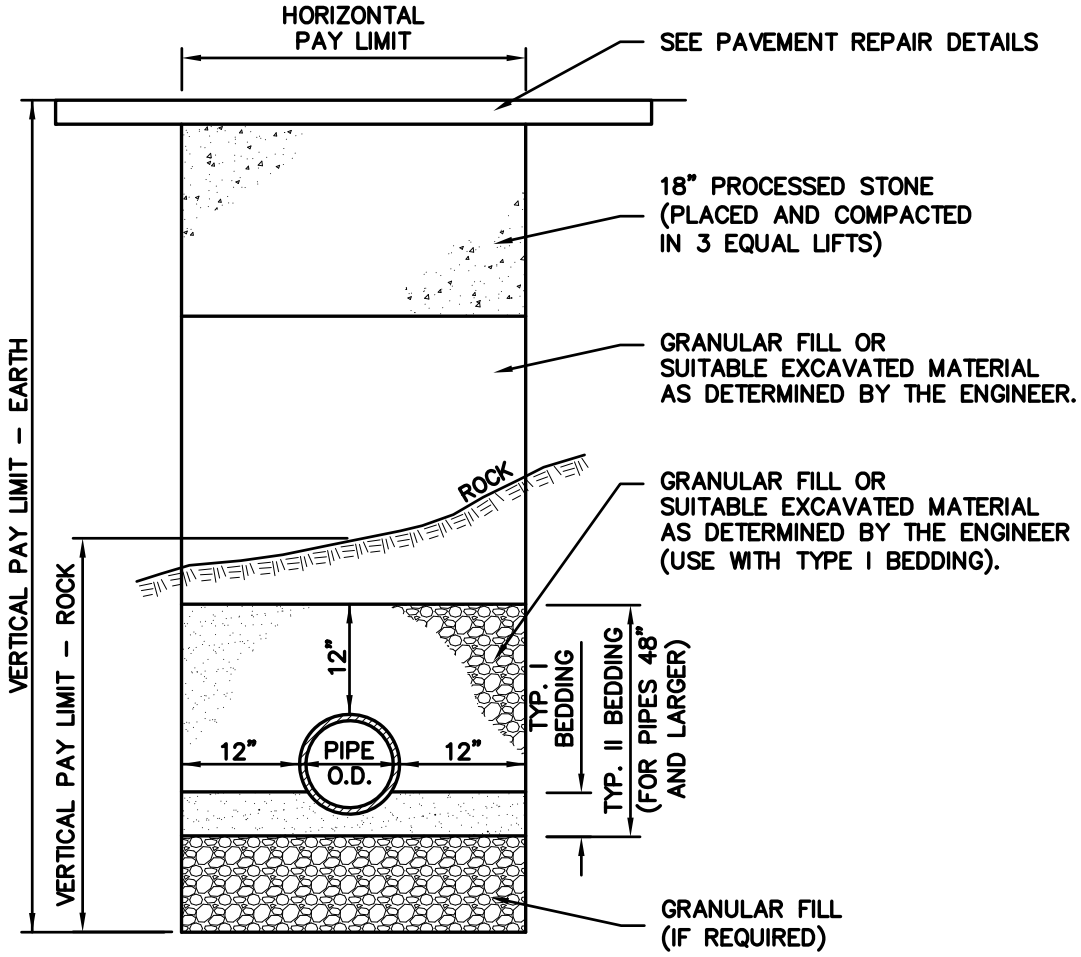

STORM AND SANITARY SEWER
TRENCH EXCAVATION AND BACKFILL – RIGID PIPE

NOT TO SCALE

DRAWN BY:	MJB
DATE:	04/08/2008
APPROVED BY:	MEM
DATE:	03/19/08

CITY OF NEW BRITAIN
DEPARTMENT OF PUBLIC WORKS
STANDARD DETAIL

N:\Shared Documents\Public Works\Library\Standard Details\Details-ACAD\Section 2\det 2-2 trench exc rigid pipe.dwg

N:\Shared Documents\Public Works\Library\Standard Details\Details-ACAD\Section 2\det 2-3 udrain edrain.dwg

UNDERDRAIN NOTES:

1) SIZE OF PIPE AS SHOWN ON PLAN. PERFORATIONS TO BE PLACED UP FOR PIPES WHICH ALSO CARRY SURFACE WATER AND DOWN FOR PIPES WHICH ONLY CARRY SUBSURFACE WATER, UNLESS OTHERWISE DIRECTED.

2) DEPTH MAY BE VARIED FOR NECESSARY OUTLET GRADE.

EDGEDRAIN NOTES:

1) THE DEPTH OF EDGEDRAIN TRENCH SHALL BE 18" MIMINUM OR TO THE BOTTOM OF SUBBASE WHEN THE SUBBASE DEPTH IS GREATER THAN 18".

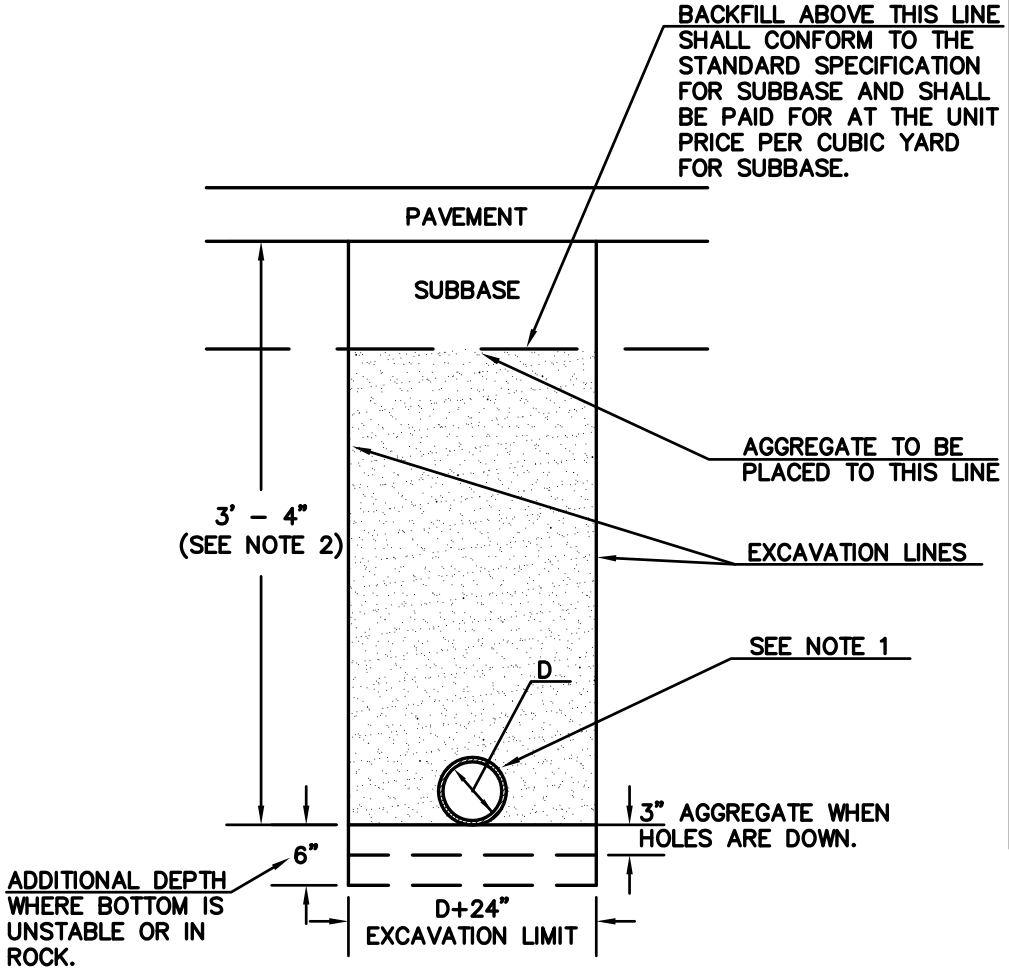

UNDERDRAIN

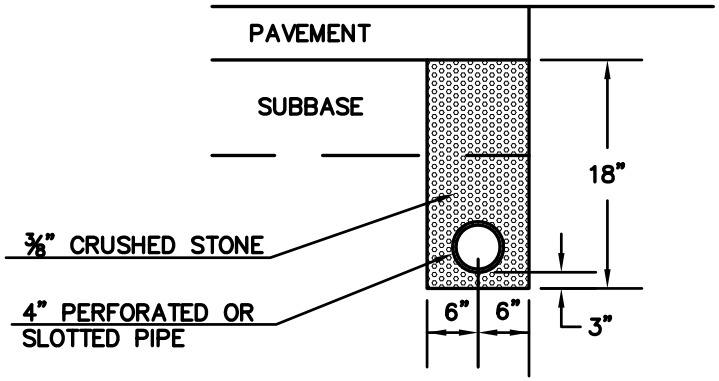

EDGEDRAIN

UNDERDRAIN AND EDGEDRAIN

NOT TO SCALE

DRAWN BY:	MJB
DATE:	04/08/2008
APPROVED BY:	MEM
DATE:	05/05/2008

CITY OF NEW BRITAIN
DEPARTMENT OF PUBLIC WORKS
STANDARD DETAIL

N:\Shared Documents\Public Works\Library\Standard Details\Details-ACAD\Section 2\det 2-4 catch basin.dwg

NOTES:

1) WALLS OF ALL CATCH BASINS OVER 10 FT. DEEP SHALL BE INCREASED TO 12" THICKNESS. INSIDE DIMENSIONS SHALL REMAIN THE SAME.
2) PROVIDE DRAINAGE OPENING IN EACH WALL AT LOWEST INVERT ELEVATION.
3) WHERE BRICK OR MASONRY CONCRETE UNITS ARE USED, CORBELLING WILL BE PERMITTED. MAXIMUM CORBEL SHALL BE 3". NO PROJECTION SHALL EXTEND INSIDE OF LIMITS NOTED BY **.
4) PRECAST CONCRETE CATCH BASIN UNITS MAY BE USED, AS DESCRIBED IN THE STANDARD SPECIFICATIONS.
5) WHERE PRECAST CONCRETE UNIT IS USED FOR THE SUMP, THE TOP OF THE UNIT SHALL BE AT LEAST 6" BELOW THE BOTTOM OF THE PIPE OUTLETTING FROM THE CATCH BASIN.
6) TOP OF FRAME ELEVATION SHALL BE DEPRESSED 1" BELOW NORMAL GUTTER GRADE.
7) PROVIDE 6"(MIN.) GRANULAR FILL UNDER STRUCTURE TO REPLACE UNSUITABLE MATERIAL.

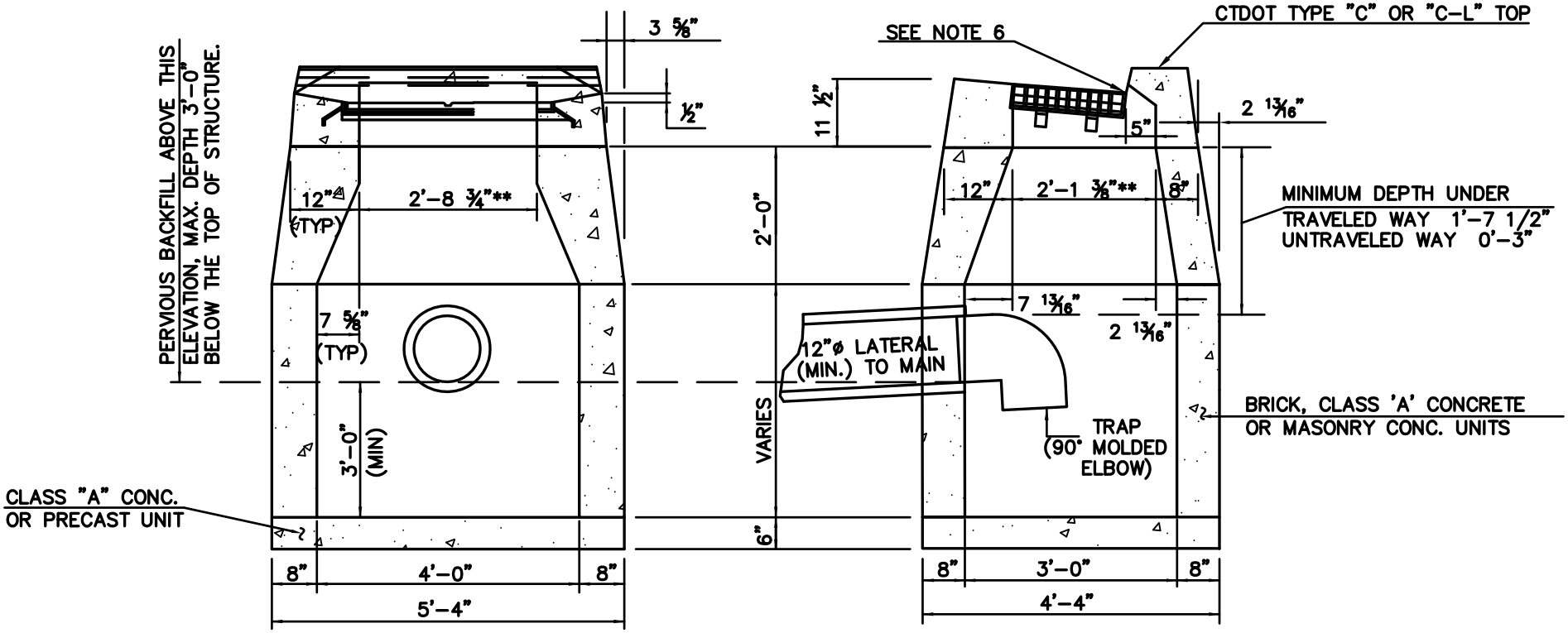

CATCH BASIN
NOT TO SCALE

DRAWN BY:	MJB
DATE:	03/04/2008
APPROVED BY:	MEM
DATE:	05/05/2008

CITY OF NEW BRITAIN
DEPARTMENT OF PUBLIC WORKS
STANDARD DETAIL

N:\Shared Documents\Public Works\Library\Standard Details\Details-ACAD\Section 2\det 2-5 dbl catch basin I.dwg

NOTES:

1) FRAME & GRATE SHALL BE CTDOT TYPE "C" OR "C-L" DOUBLE GRATE TYPE I.
2) WALLS OF ALL CATCH BASINS OVER 10 FT. DEEP TO BE INCREASED TO 12" THICKNESS, INSIDE DIMENSIONS TO REMAIN THE SAME.
3) PROVIDE DRAINAGE OPENING IN EACH WALL AT LOWEST INVERT ELEVATION.
4) PRECAST CONCRETE UNITS, BRICK, CLASS "A" CONCRETE OR MASONRY CONCRETE UNITS. WHERE BRICK OR MASONRY CONCRETE UNITS ARE USED, CORBELLING WILL BE PERMITTED. MAXIMUM CORBEL TO BE 3". NO PROJECTION SHALL EXTEND INSIDE LIMITS NOTED BY **.
5) PRECAST CONCRETE CATCH BASIN UNITS MAY BE USED, AS DESCRIBED IN THE STANDARD SPECIFICATIONS.
6) WHERE PRECAST CONCRETE UNIT IS USED FOR THE SUMP, THE TOP OF THE UNIT SHALL BE AT LEAST 6" BELOW THE BOTTOM OF THE PIPE OUTLETTING FROM THE CATCH BASIN.
7) TOP OF FRAME ELEVATION SHALL BE DEPRESSED 1" BELOW NORMAL GUTTER GRADE.
8) PROVIDE 6"(MIN.) GRANULAR FILL UNDER STRUCTURE TO REPLACE UNSUITABLE MATERIAL.

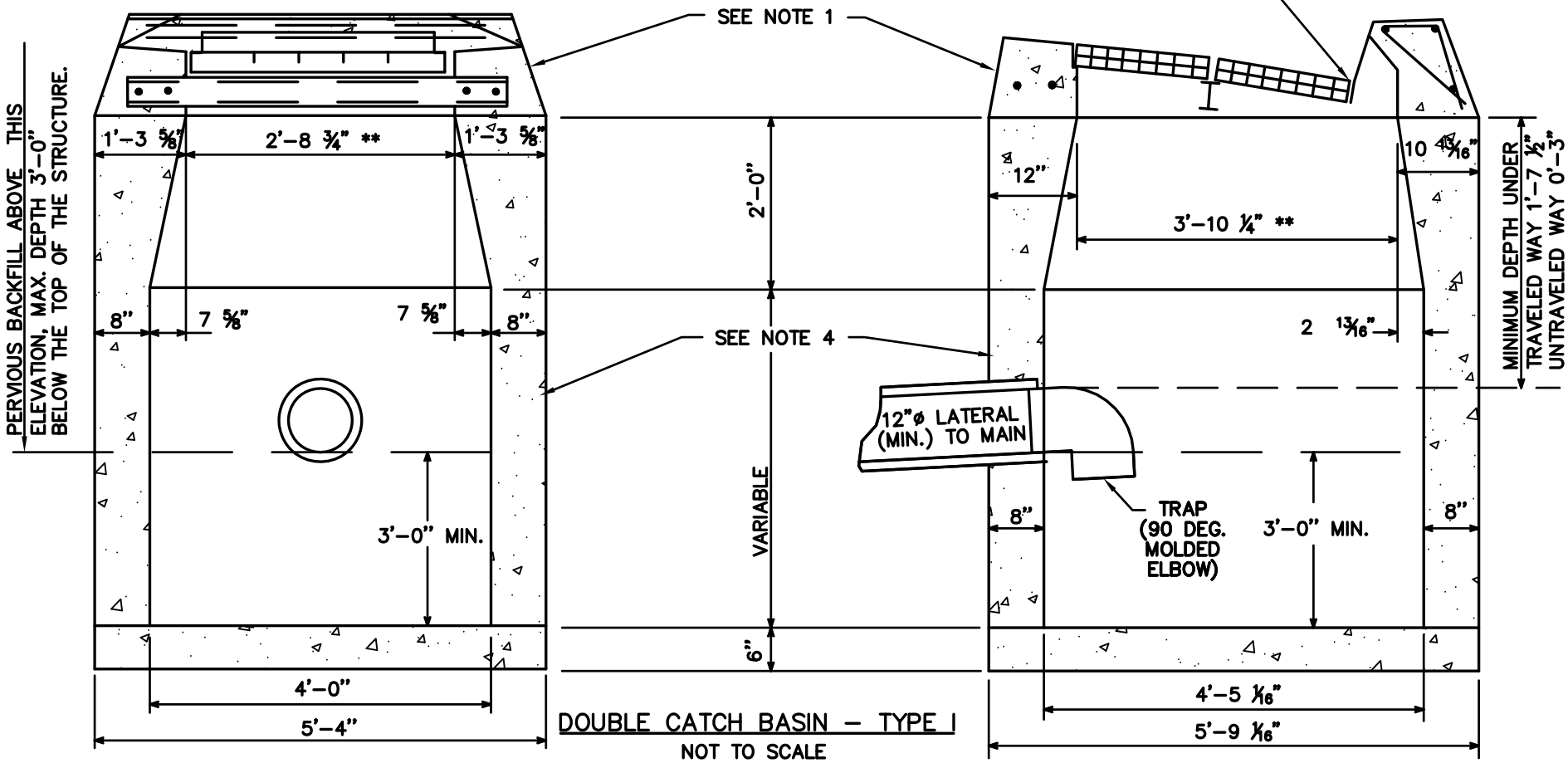

DOUBLE CATCH BASIN – TYPE I

NOT TO SCALE

DRAWN BY:	MJB
DATE:	03/05/2008
APPROVED BY:	MEM
DATE:	05/05/2008

CITY OF NEW BRITAIN
DEPARTMENT OF PUBLIC WORKS
STANDARD DETAIL

N:\Shared Documents\Public Works\Library\Standard Details\Details-ACAD\Section 2\det 2-6 dbl catch basin II.dwg

NOTES:

1) FRAME & GRATE SHALL BE CTDOT TYPE "C" OR "C-L" DOUBLE GRATE TYPE II.
2) WALLS OF ALL CATCH BASINS OVER 10 FT. DEEP TO BE INCREASED TO 12" THICKNESS, INSIDE DIMENSIONS TO REMAIN THE SAME.
3) PROVIDE DRAINAGE OPENING IN EACH WALL AT LOWEST INVERT ELEVATION.
4) PRECAST CONCRETE UNITS, BRICK, CLASS "A" CONCRETE OR MASONRY CONCRETE UNITS. WHERE BRICK OR MASONRY CONCRETE UNITS ARE USED, CORBELLING WILL BE PERMITTED. MAXIMUM CORBEL TO BE 3". NO PROJECTION SHALL EXTEND INSIDE LIMITS NOTED BY **.
5) PRECAST CONCRETE CATCH BASIN UNITS MAY BE USED, AS DESCRIBED IN THE STANDARD SPECIFICATIONS.
6) WHERE PRECAST CONCRETE UNIT IS USED FOR THE SUMP, THE TOP OF THE UNIT SHALL BE AT LEAST 6" BELOW THE BOTTOM OF THE PIPE OUTLETTING FROM THE CATCH BASIN.
7) TOP OF FRAME ELEVATION SHALL BE DEPRESSED 1" BELOW NORMAL GUTTER GRADE.
8) PROVIDE 6"(MIN.) GRANULAR FILL UNDER STRUCTURE TO REPLACE UNSUITABLE MATERIAL.

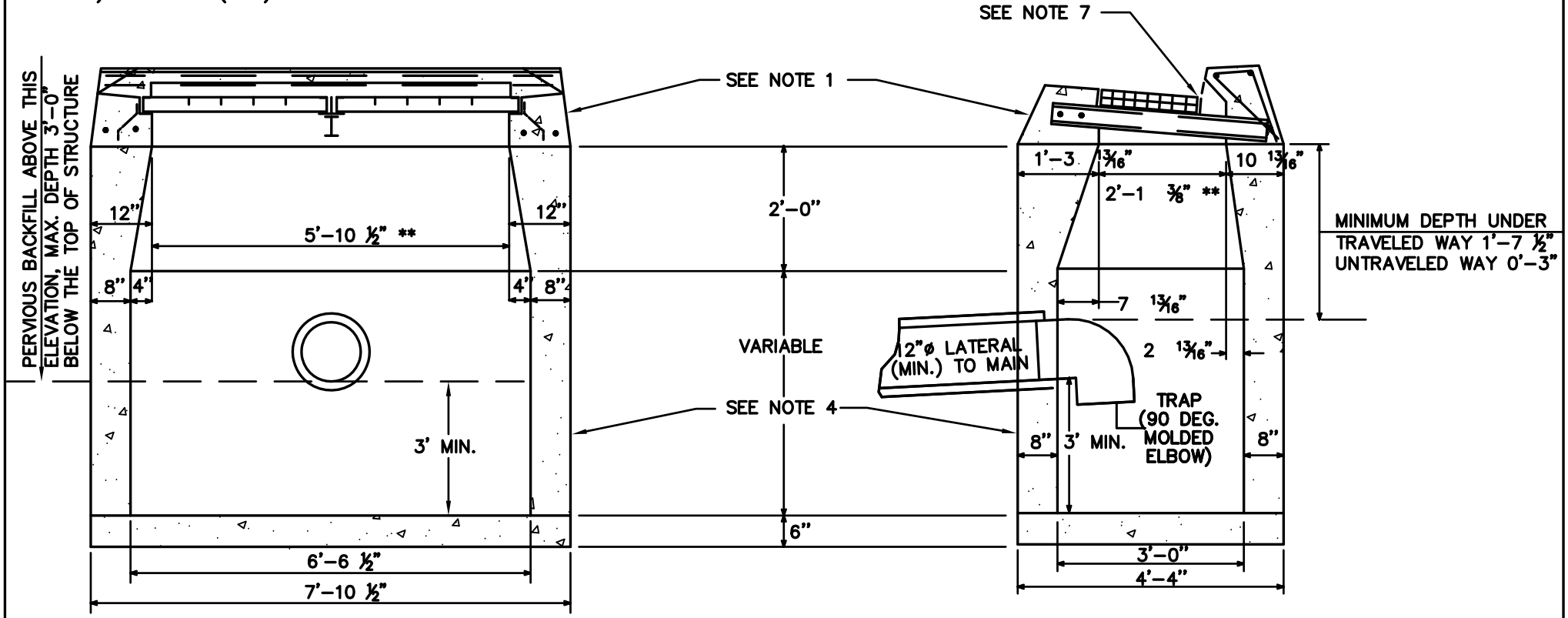

DOUBLE CATCH BASIN – TYPE II

NOT TO SCALE

DRAWN BY:	MJB
DATE:	03/05/2008
APPROVED BY:	MEM
DATE:	05/05/2008

CITY OF NEW BRITAIN
DEPARTMENT OF PUBLIC WORKS
STANDARD DETAIL

N:\Shared Documents\Public Works\Library\Standard Details\Details-ACAD\Section 2\det 2-7 typ cb depressed gutter.dwg

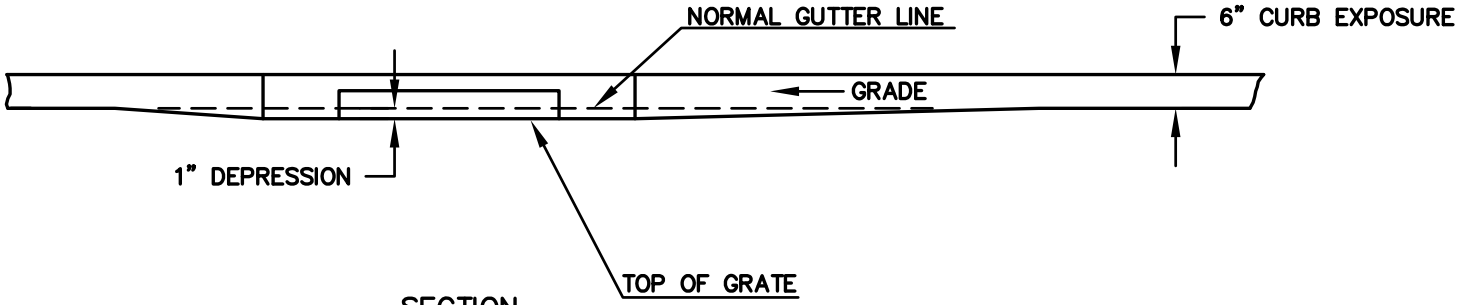

SECTION

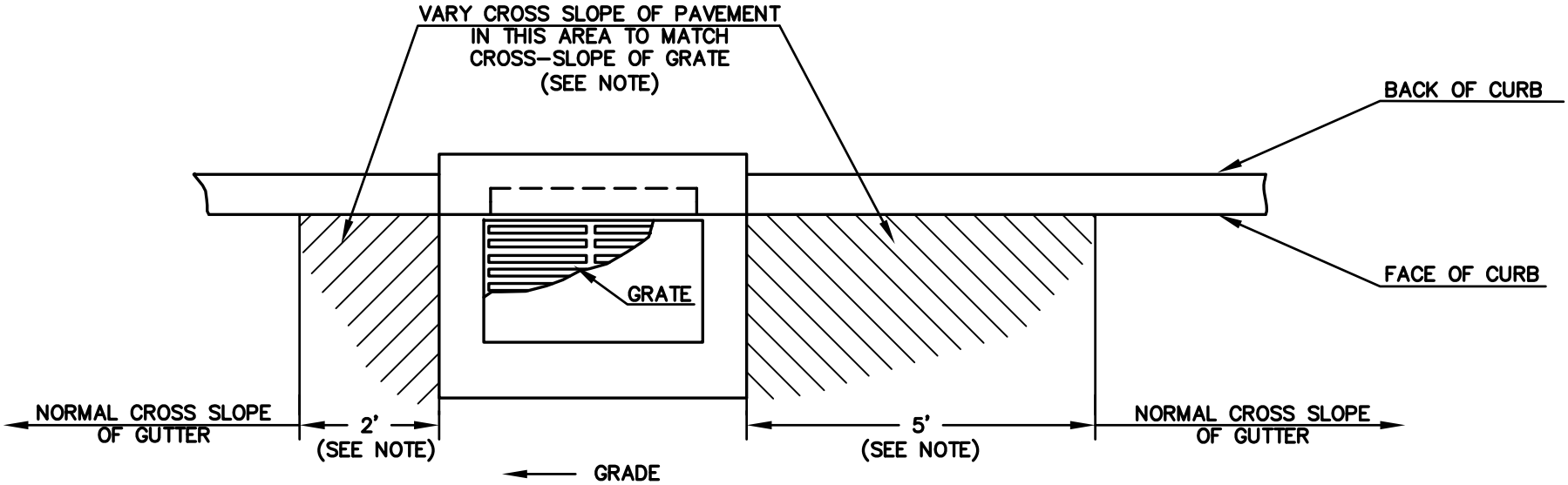

PLAN

NOTE:
WHEN C.B. IS AT A LOW POINT,
VARY CROSS-SLOPE OF PAVEMENT
4' EITHER SIDE OF C.B. TO
SET GRADE WITH 1" DEPRESSION.

TYPICAL CATCH BASIN DEPRESSED GUTTER

NOT TO SCALE

DRAWN BY:	MJB
DATE:	03/05/2008
APPROVED BY:	MEM
DATE:	05/05/2008

CITY OF NEW BRITAIN
DEPARTMENT OF PUBLIC WORKS
STANDARD DETAIL

NOTES:
1) DEPENDING ON USAGE AREA, OTHER DESIGNS MAY BE AVAILABLE, AS APPROVED BY THE ENGINEER.
2) MAXIMUM DEPTH OF YARD DRAIN SHALL BE 6'.

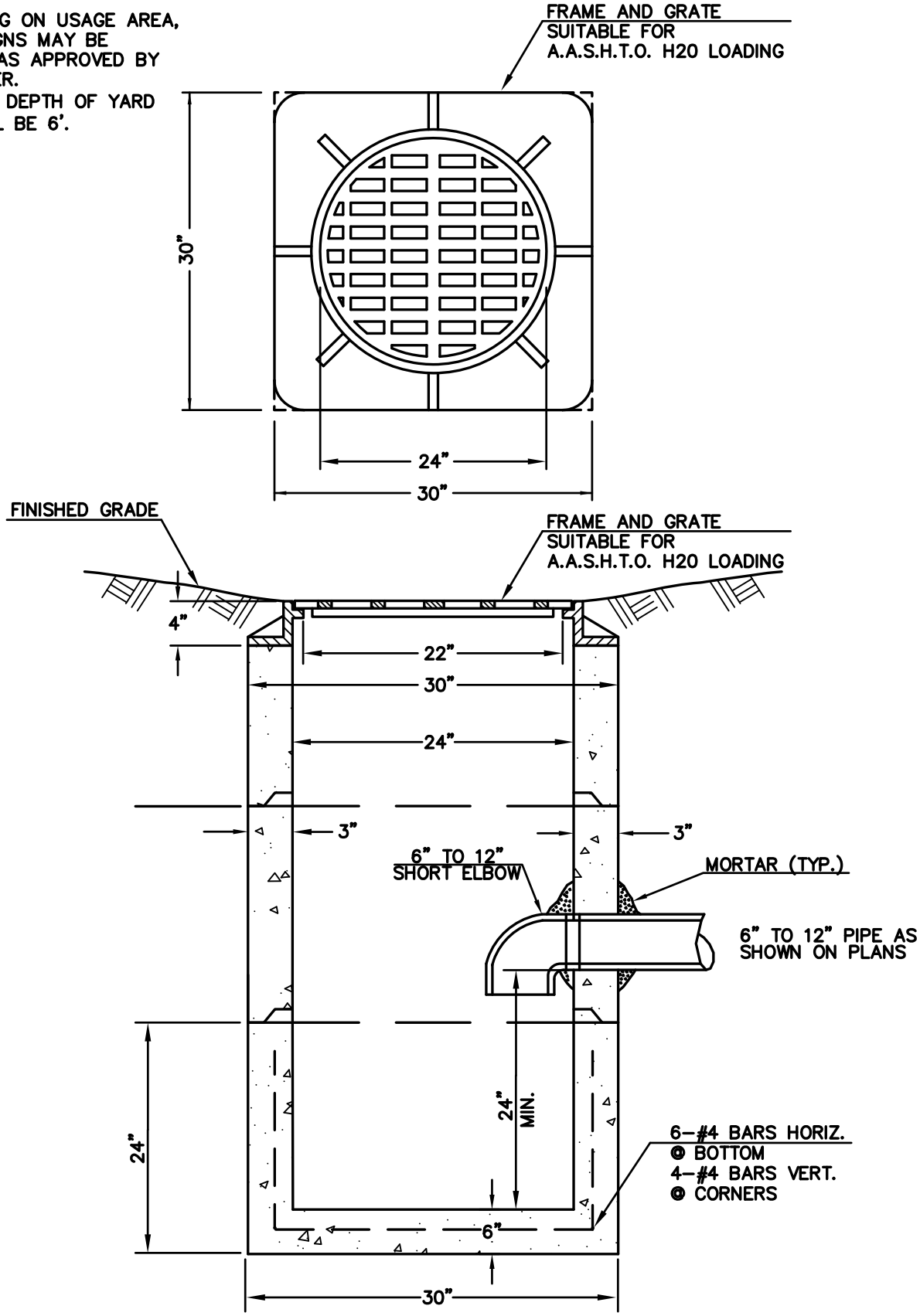

YARD DRAIN
NOT TO SCALE

DRAWN BY:	MJB	CITY OF NEW BRITAIN DEPARTMENT OF PUBLIC WORKS STANDARD DETAIL
DATE:	04/08/2008	
APPROVED BY:	MEM	
DATE:	05/05/2008	

N:\Shared Documents\Public Works\Library\Standard Details\Details-ACAD\Section 2\det 2-8 yard drain.dwg

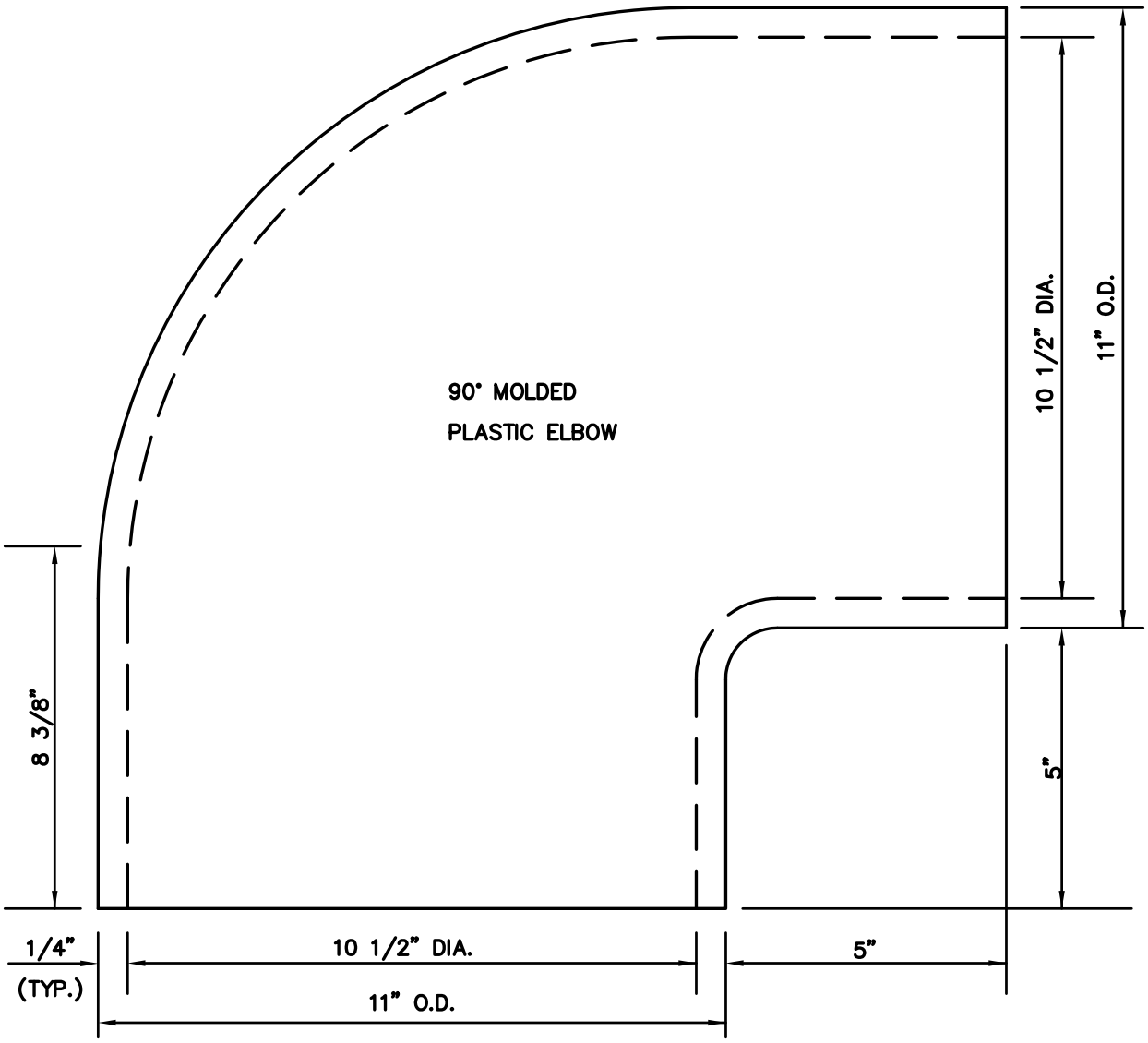

CATCH BASIN TRAP
NOT TO SCALE

DRAWN BY:	MJB	CITY OF NEW BRITAIN DEPARTMENT OF PUBLIC WORKS STANDARD DETAIL
DATE:	10/15/2007	
APPROVED BY:	MEM	
DATE:	05/05/2008	

N:\Shared Documents\Public Works\Library\Standard Details\Details-ACAD\Section 2\det 2-9 cb trap.dwg

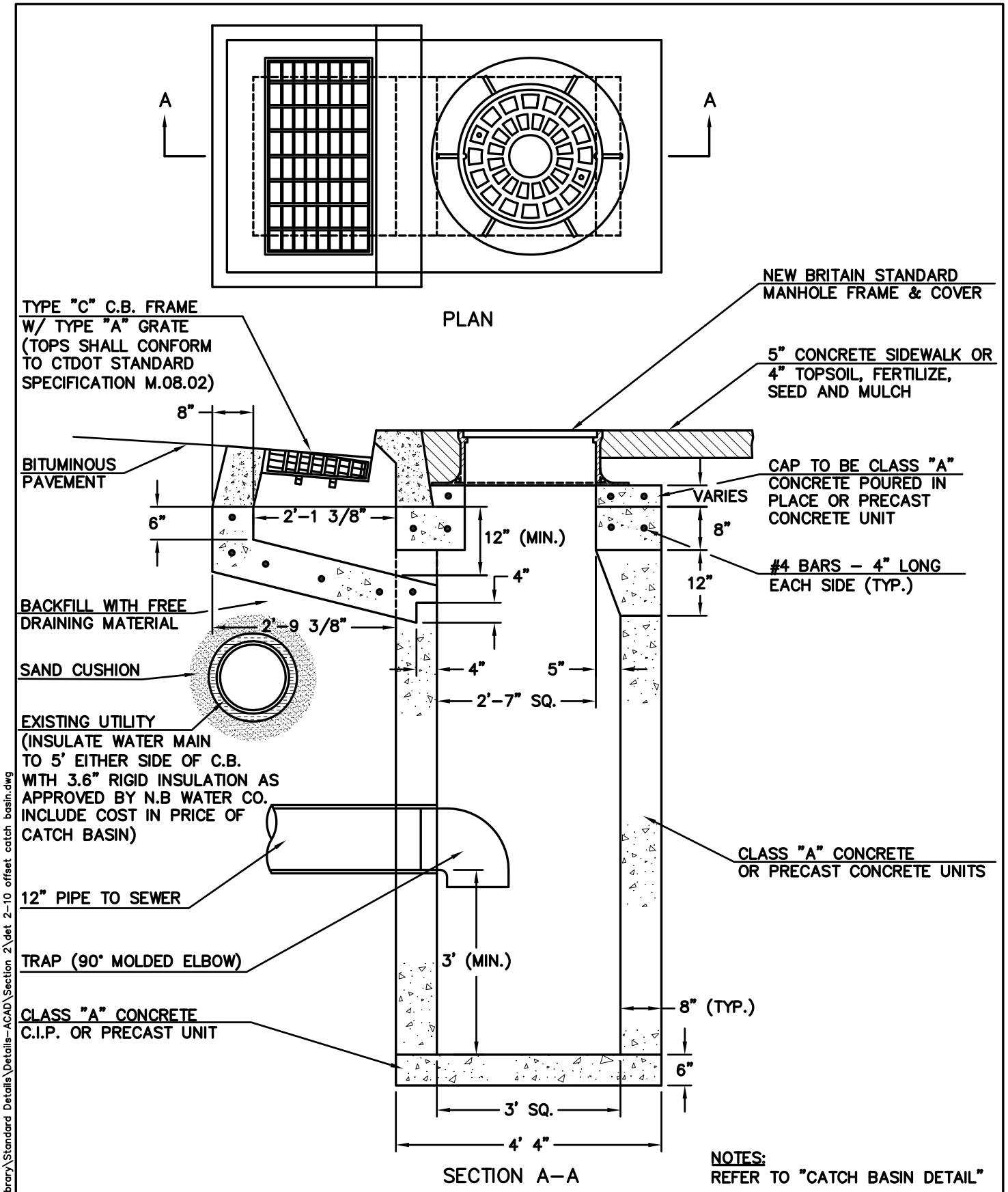

NOTES:
REFER TO "CATCH BASIN DETAIL"

OFFSET CATCH BASIN – TYPE "A"
NOT TO SCALE

DRAWN BY:	MJB	CITY OF NEW BRITAIN DEPARTMENT OF PUBLIC WORKS STANDARD DETAIL
DATE:	04/08/2008	
APPROVED BY:	MEM	
DATE:	05/05/2008	

N:\Shared Documents\Public Works\Library\Standard Details\Details-ACAD\Section 2\det 2-10 offset catch basin.dwg

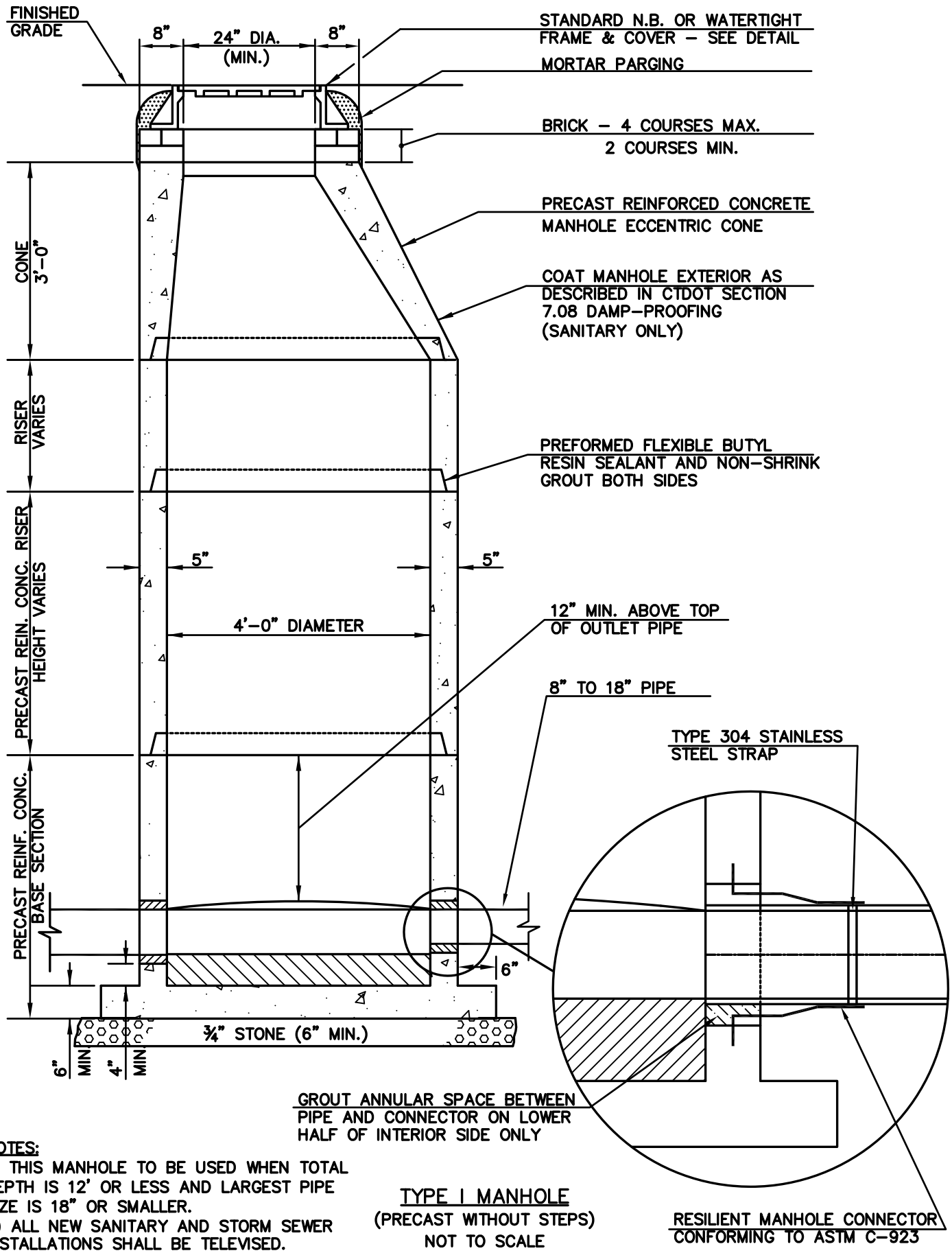

NOTES:
1) THIS MANHOLE TO BE USED WHEN TOTAL DEPTH IS 12' OR LESS AND LARGEST PIPE SIZE IS 18" OR SMALLER.
2) ALL NEW SANITARY AND STORM SEWER INSTALLATIONS SHALL BE TELEVISED.

TYPE I MANHOLE
(PRECAST WITHOUT STEPS)
NOT TO SCALE

DRAWN BY:	MJB
DATE:	04/17/2008
APPROVED BY:	MEM
DATE:	05/05/2008

CITY OF NEW BRITAIN
DEPARTMENT OF PUBLIC WORKS
STANDARD DETAIL

N:\Shared Documents\Public Works\Library\Standard Details\Details-ACAD\Section 2\det 2-11 type I manhole.dwg

N:\Shared Documents\Public Works\Library\Standard Details\Details-ACAD\Section 2\det 2-12 mod typ I out drop mh.dwg

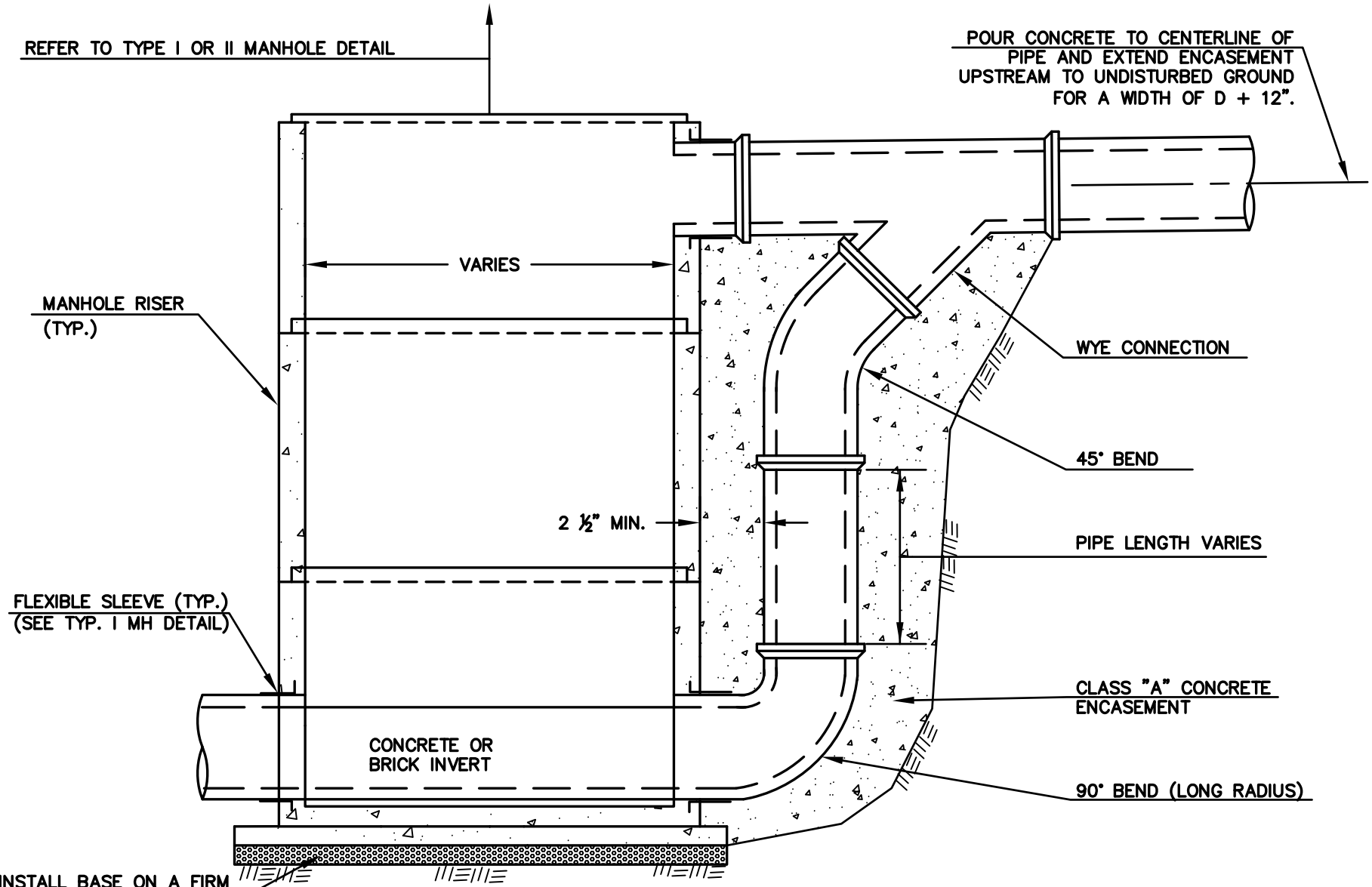

MODIFIED TYPE I OUTSIDE DROP MANHOLE

NOT TO SCALE
MUST BE APPROVED BY CITY ENGINEER

NOTES
ALL NEW SANITARY AND STORM SEWER INSTALLATIONS SHALL BE TELEVISED.

DRAWN BY:	MJB
DATE:	04/08/2008
APPROVED BY:	MEM
DATE:	05/05/2008

CITY OF NEW BRITAIN
DEPARTMENT OF PUBLIC WORKS
STANDARD DETAIL

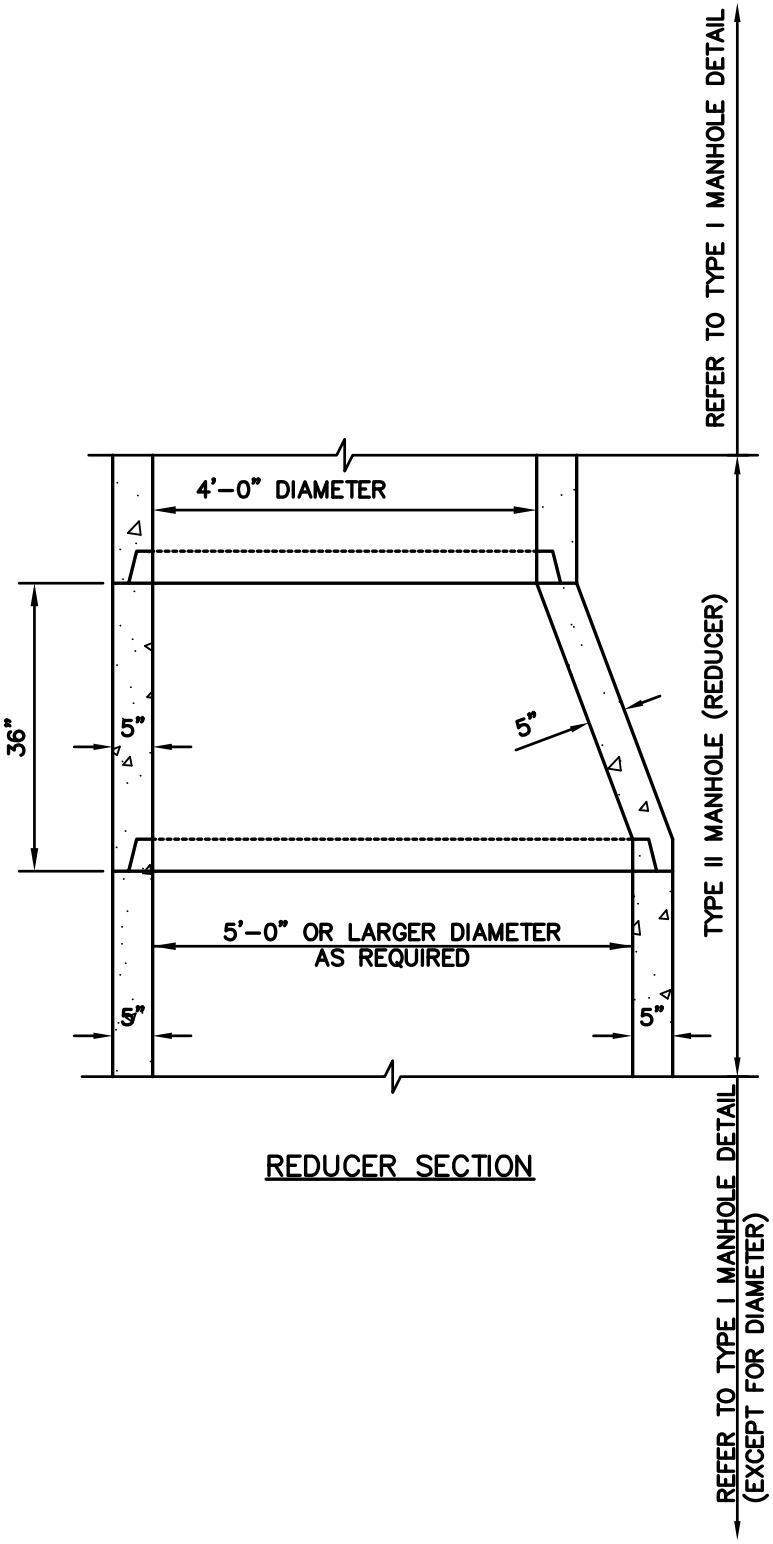

REDUCER SECTION

NOTES:

1) THIS MANHOLE TO BE USED WHEN TOTAL DEPTH IS GREATER THAN 12' OR ANY PIPE SIZE IS GREATER THAN 18".
2) ALL NEW SANITARY AND STORM SEWER INSTALLATIONS SHALL BE TELEVISED.

TYPE II MANHOLE
(PRECAST WITHOUT STEPS)
NOT TO SCALE

DRAWN BY:	MJB
DATE:	03/06/2008
APPROVED BY:	MEM
DATE:	05/05/2008

CITY OF NEW BRITAIN
DEPARTMENT OF PUBLIC WORKS
STANDARD DETAIL

N:\Shared Documents\Public Works\Library\Standard Details\Details-ACAD\Section 2\det 2-13 type II manhole.dwg

N:\Shared Documents\Public Works\Library\Standard Details\Details-ACAD\Section 2\det 2-14 mod typ II in drop mh.dwg

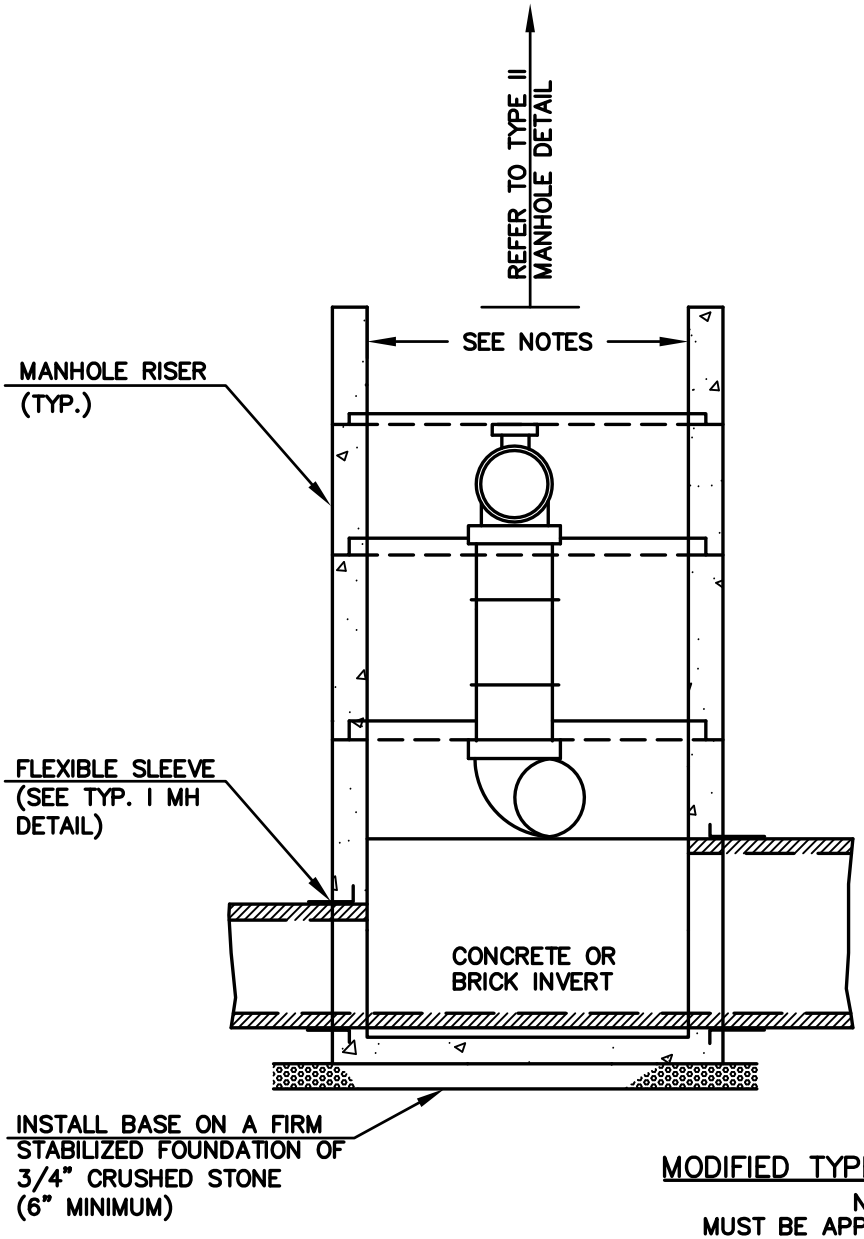

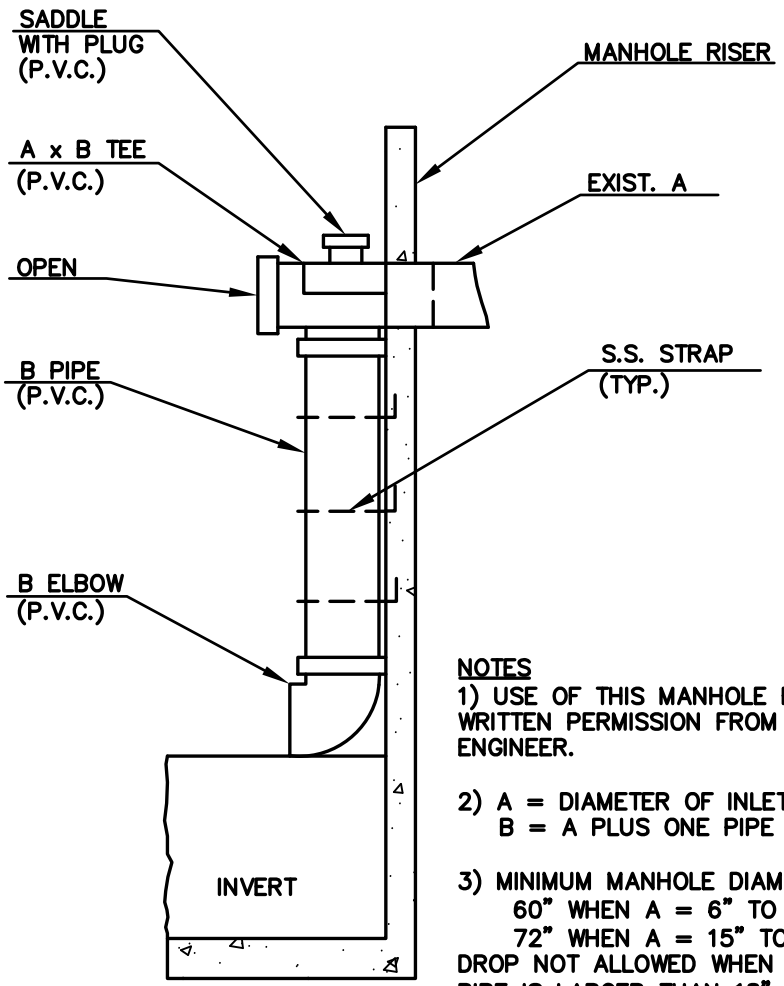

NOTES

1) USE OF THIS MANHOLE REQUIRES WRITTEN PERMISSION FROM THE CITY ENGINEER.

2) A = DIAMETER OF INLET PIPE
B = A PLUS ONE PIPE SIZE

3) MINIMUM MANHOLE DIAMETER
60" WHEN A = 6" TO 12"
72" WHEN A = 15" TO 18"
DROP NOT ALLOWED WHEN INLET PIPE IS LARGER THAN 18".

4) ALL NEW SANITARY AND STORM SEWER INSTALLATIONS SHALL BE TELEVISED.

MODIFIED TYPE II INSIDE DROP MANHOLE

NOT TO SCALE
MUST BE APPROVED BY CITY ENGINEER

DRAWN BY:	MJB
DATE:	04/08/2008
APPROVED BY:	MEM
DATE:	05/05/2008

CITY OF NEW BRITAIN
DEPARTMENT OF PUBLIC WORKS
STANDARD DETAIL

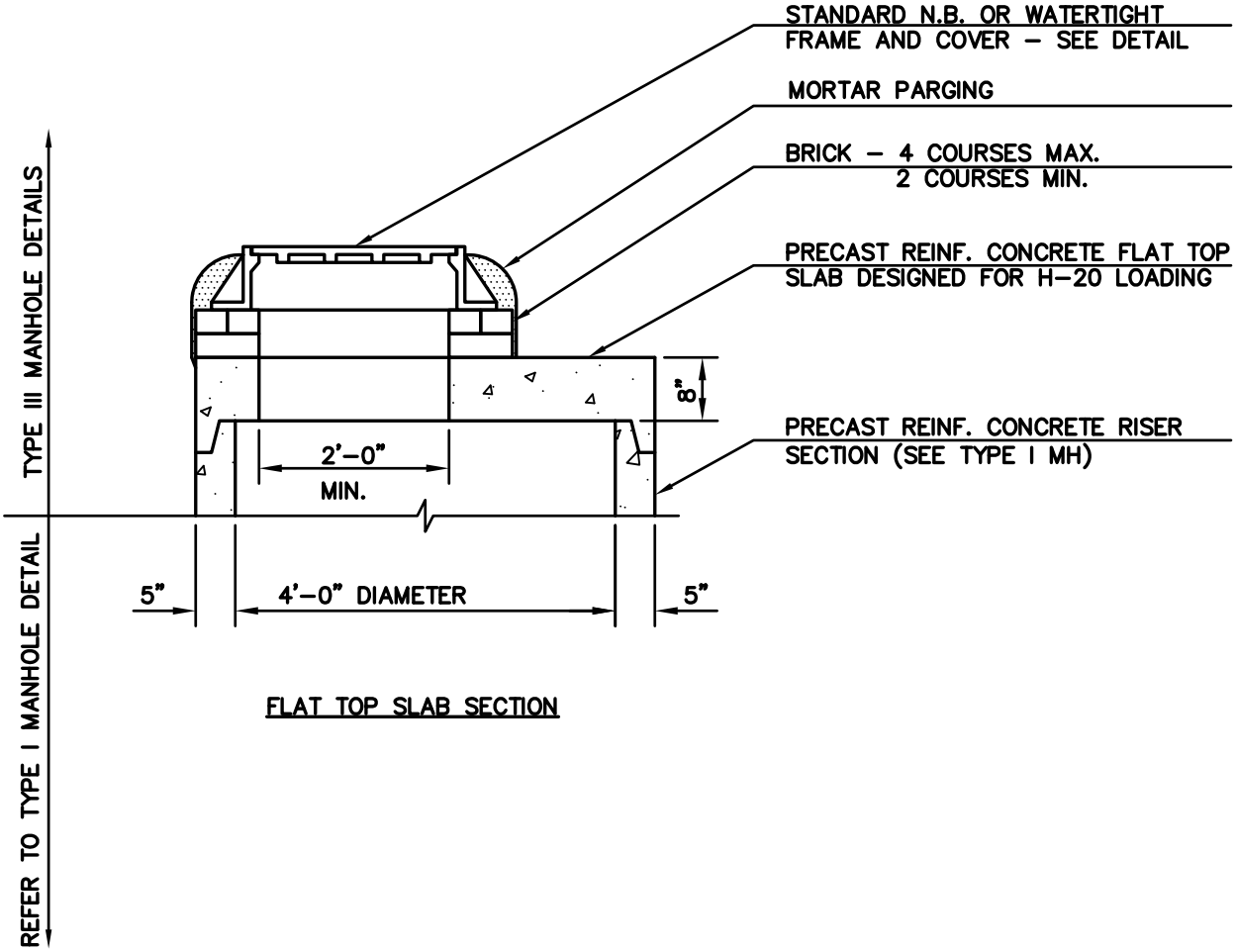

FLAT TOP SLAB SECTION

NOTES:

1) THIS MANHOLE TO BE USED WHEN SHALLOW INSTALLATION DOES NOT PERMIT THE USE OF A MANHOLE CONE SECTION, OR AS DIRECTED.
2) ALL NEW SANITARY AND STORM SEWER INSTALLATIONS SHALL BE TELEVISED.

TYPE III MANHOLE
(PRECAST WITHOUT STEPS)
NOT TO SCALE

DRAWN BY:	MJB
DATE:	03/06/2008
APPROVED BY:	MEM
DATE:	05/05/2008

CITY OF NEW BRITAIN
DEPARTMENT OF PUBLIC WORKS
STANDARD DETAIL

N:\Shared Documents\Public Works\Library\Standard Details\Details-ACAD\Section 2\det 2-15 type III manhole.dwg

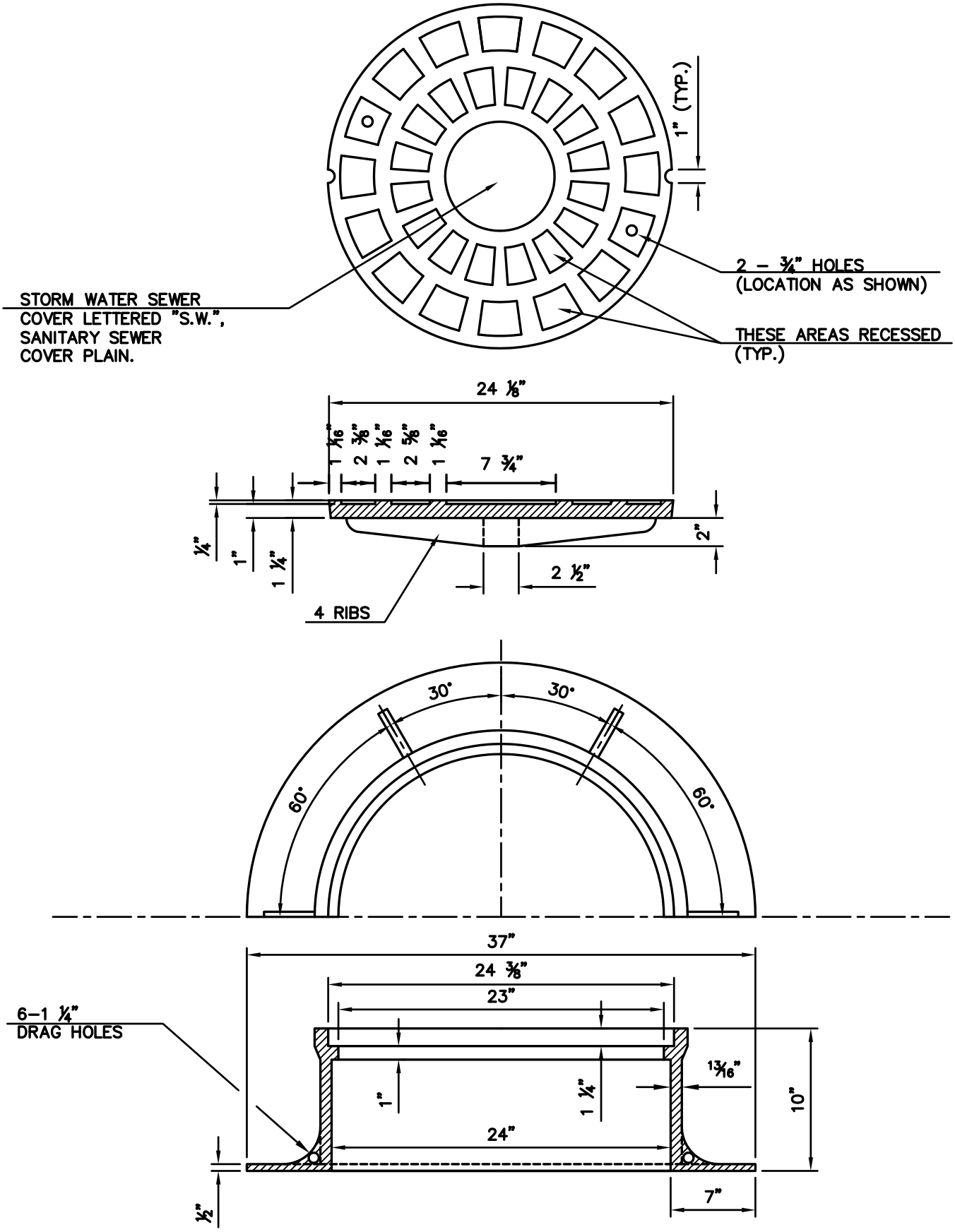

NEW BRITAIN STANDARD MANHOLE CASTING

NOT TO SCALE

DRAWN BY:	MJB	CITY OF NEW BRITAIN DEPARTMENT OF PUBLIC WORKS STANDARD DETAIL
DATE:	04/09/2008	
APPROVED BY:	MEM	
DATE:	05/05/2008	

N:\Shared Documents\Public Works\Library\Standard Details\Details-ACAD\Section 2\det 2-16 stand mh casting.dwg

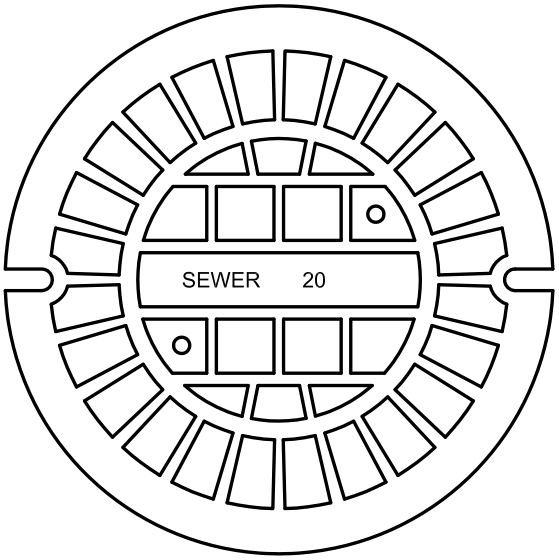

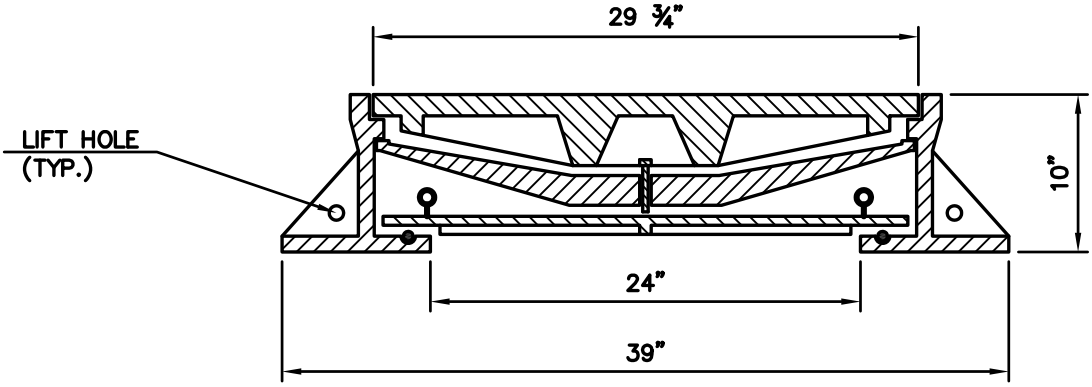

NEW BRITAIN STANDARD
WATERTIGHT MANHOLE CASTING
NOT TO SCALE

DRAWN BY:	MJB	CITY OF NEW BRITAIN DEPARTMENT OF PUBLIC WORKS STANDARD DETAIL
DATE:	04/09/2008	
APPROVED BY:	MEM	
DATE:	05/05/2008	

N:\Shared Documents\Public Works\Library\Standard Details\Details-ACAD\Section 2\det 2-17 watertight mh casting.dwg

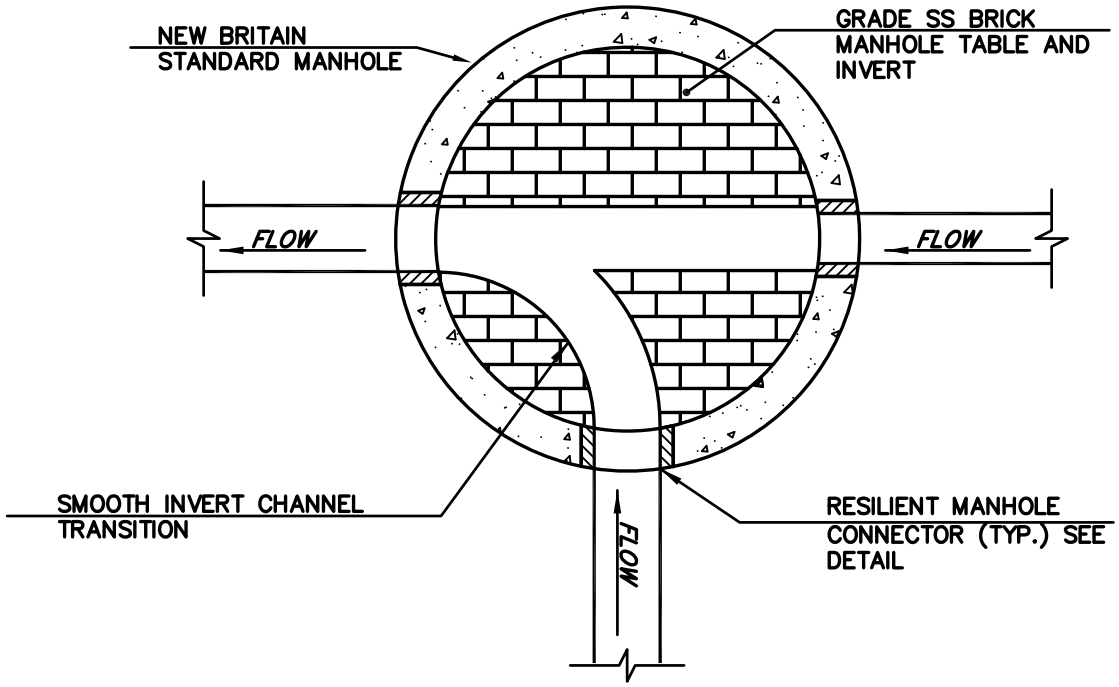

PLAN AT INVERT

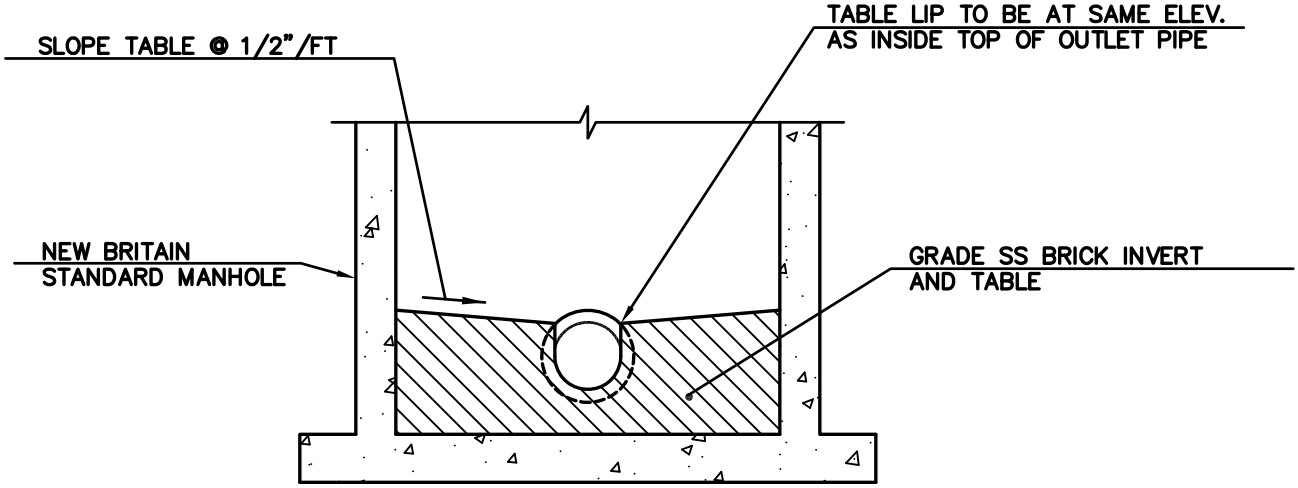

VERTICAL SECTION

MANHOLE INVERT

NOT TO SCALE

DRAWN BY:	MJB	CITY OF NEW BRITAIN DEPARTMENT OF PUBLIC WORKS STANDARD DETAIL
DATE:	03/06/2008	
APPROVED BY:	MEM	
DATE:	05/05/2008	

N:\Shared Documents\Public Works\Library\Standard Details\Details-ACAD\Section 2\det 2-18 mh invert detail.dwg

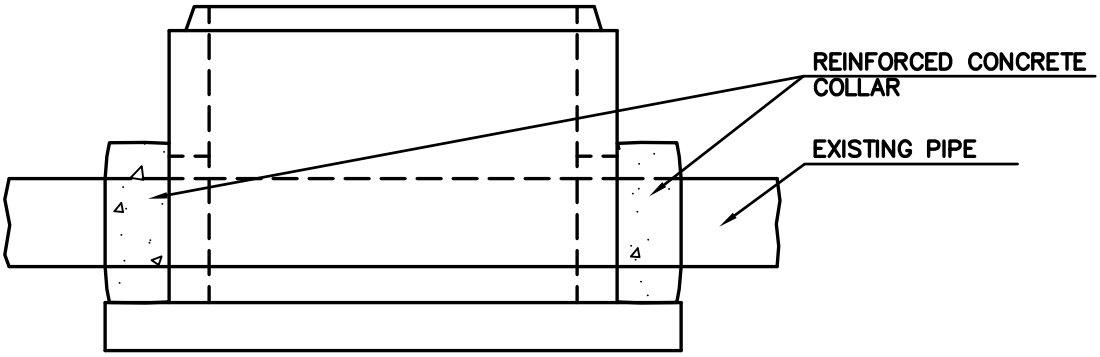

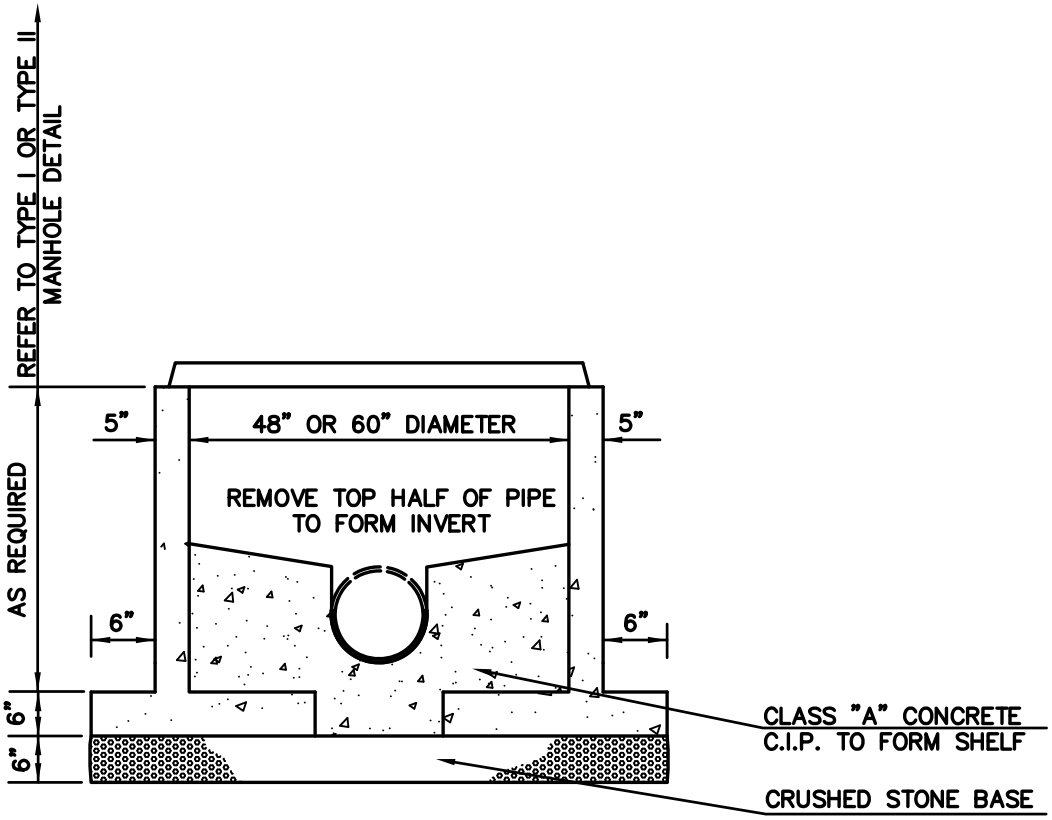

PRECAST DOGHOUSE MANHOLE BASE
(FOR INSTALLATION OVER EXISTING SEWER LINE)
NOT TO SCALE

DRAWN BY:	MJB	CITY OF NEW BRITAIN DEPARTMENT OF PUBLIC WORKS STANDARD DETAIL
DATE:	04/17/2008	
APPROVED BY:	MEM	
DATE:	05/05/2008	

N:\Shared Documents\Public Works\Library\Standard Details\Details-ACAD\Section 2\det 2-19 doghouse mh.dwg

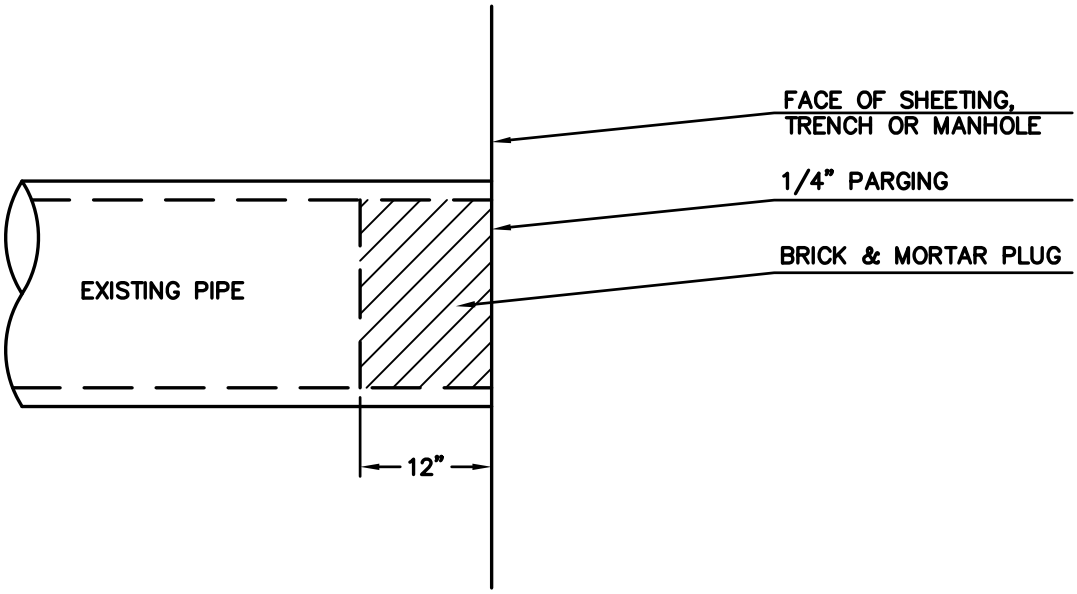

PIPE PLUG
NOT TO SCALE

DRAWN BY:	MJB
DATE:	03/06/2008
APPROVED BY:	MEM
DATE:	05/05/2008

CITY OF NEW BRITAIN
DEPARTMENT OF PUBLIC WORKS
STANDARD DETAIL

N:\Shared Documents\Public Works\Library\Standard Details\Details-ACAD\Section 2\det 2-20 pipe plug.dwg

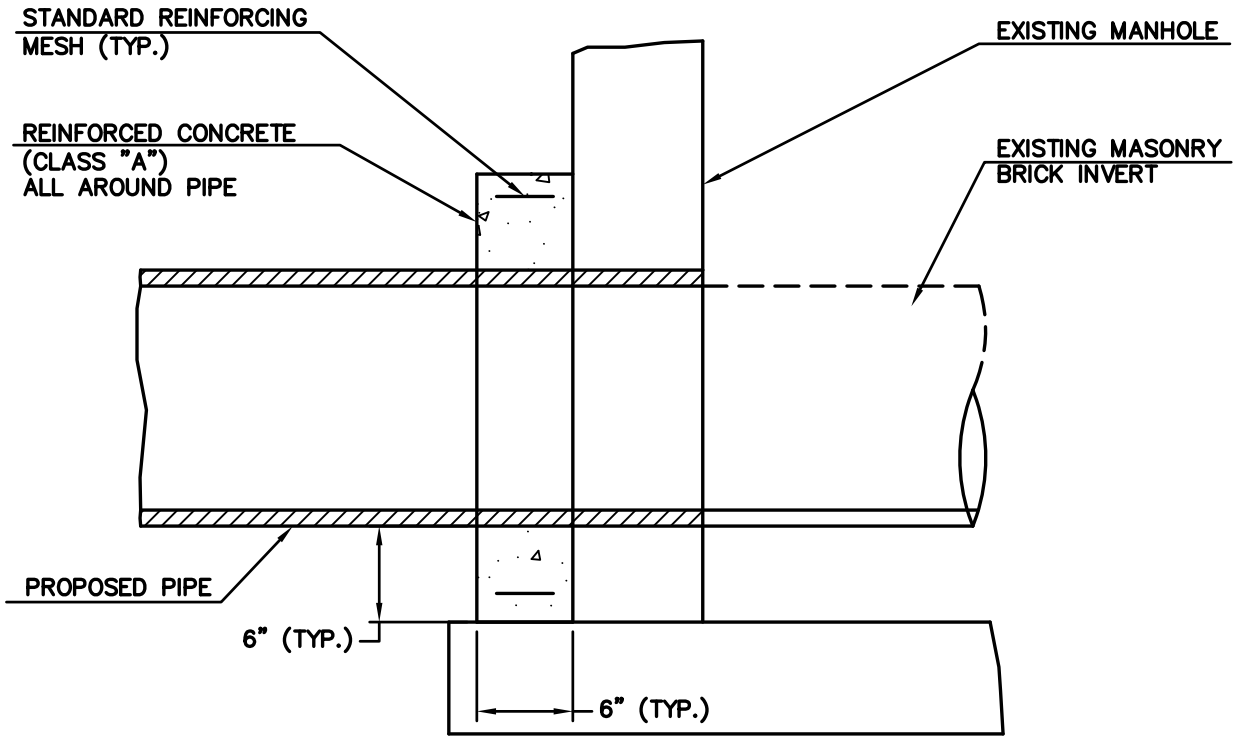

SECTION

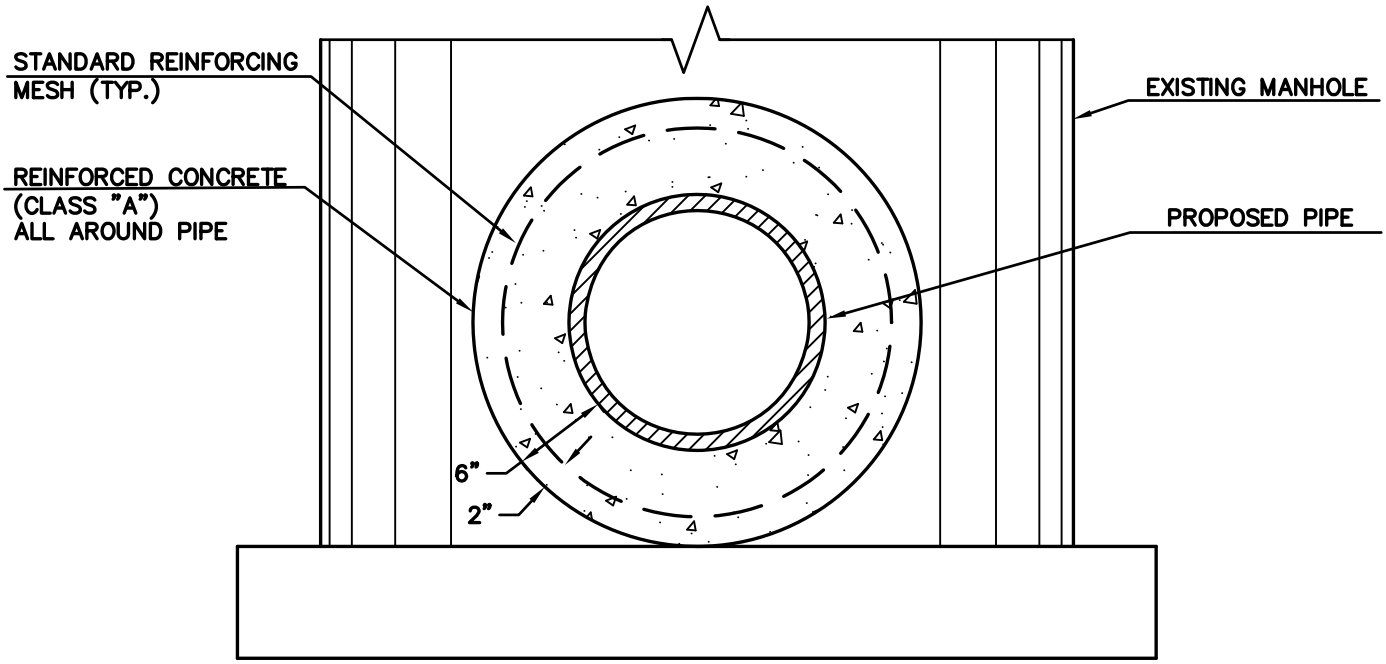

ELEVATION

CONCRETE MANHOLE COLLAR

NOT TO SCALE

DRAWN BY:	MJB	CITY OF NEW BRITAIN DEPARTMENT OF PUBLIC WORKS STANDARD DETAIL
DATE:	03/06/2008	
APPROVED BY:	MEM	
DATE:	05/05/2008	

N:\Shared Documents\Public Works\Library\Standard Details\Details-ACAD\Section 2\det 2-21 manhole collar.dwg

NOTE:
THIS DETAIL APPLIES ONLY TO STORM PIPE CONNECTIONS.
FOR SANITARY CONNECTIONS, USE "INSERTA TEE" CONNECTION OR APPROVED EQUAL.

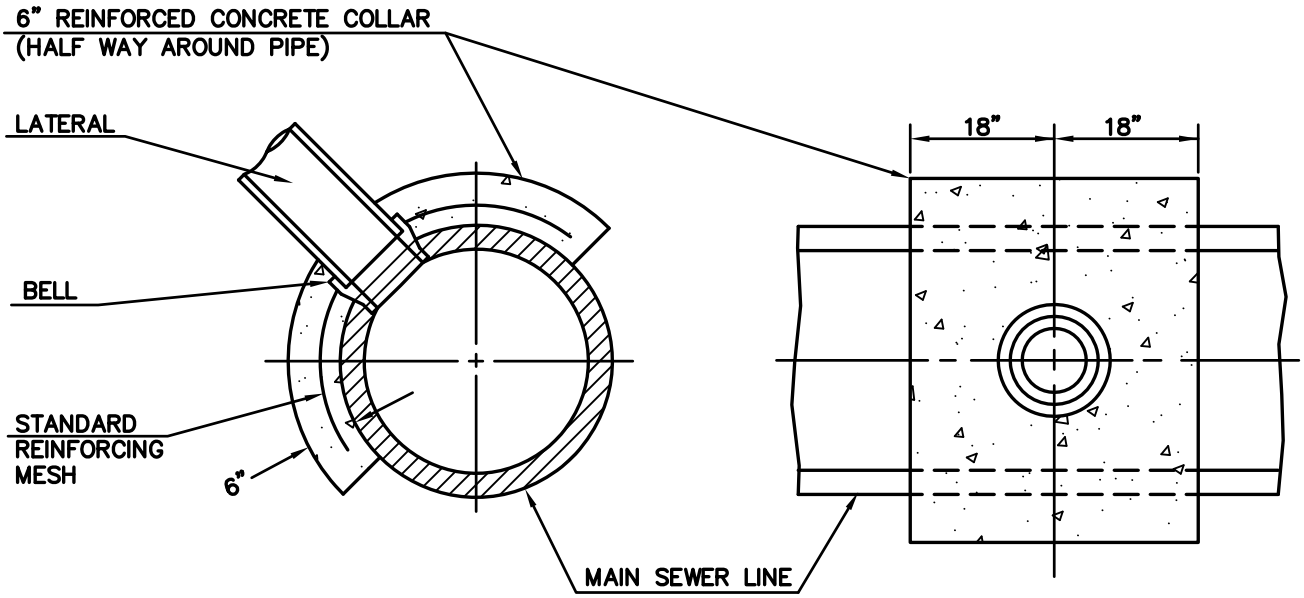

HUB TO PIPE

CONCRETE PIPE COLLAR
NOT TO SCALE

DRAWN BY:	MJB	CITY OF NEW BRITAIN DEPARTMENT OF PUBLIC WORKS STANDARD DETAIL
DATE:	04/09/2008	
APPROVED BY:	MEM	
DATE:	05/05/2008	

N:\Shared Documents\Public Works\Library\Standard Details\Details-ACAD\Section 2\det 2-22 concrete collar.dwg

** REMOVE SHEETING TO INSTALL CAPPED STUB AND FACILITATE FUTURE CONNECTION

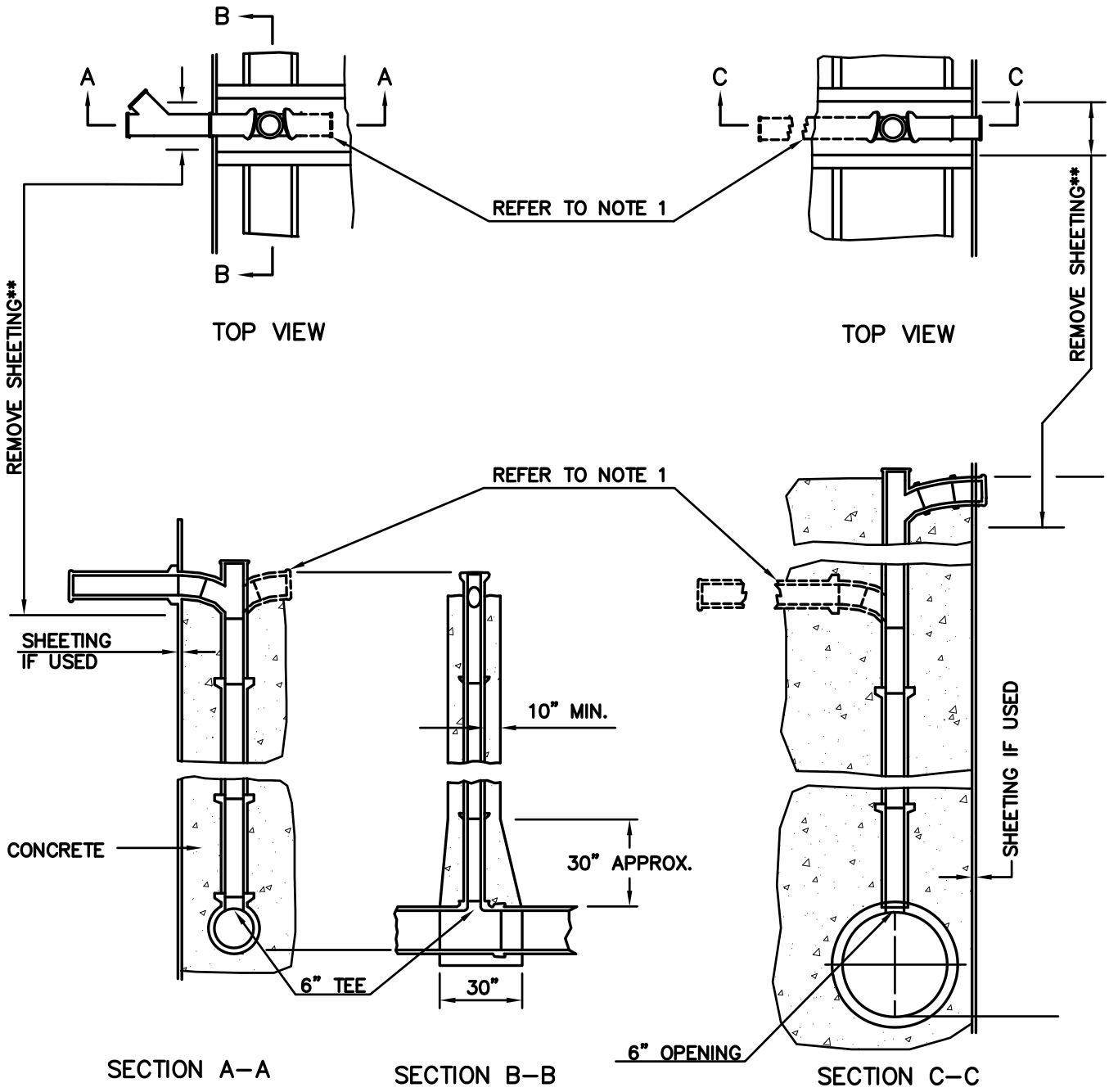

NOTES:

1) ALTHOUGH CHIMNEYS ARE SHOWN WITH TWO LATERAL CONNECTIONS, THE CITY REQUIRES ONLY ONE CONNECTION PER CHIMNEY. TWO CONNECTIONS PER CHIMNEY, AS SHOWN, MUST BE APPROVED BY THE CITY ENGINEER.

2) ALL OPENINGS AT TOP OF CHIMNEYS SHALL BE CAPPED AT THE TIME OF CONSTRUCTION.

3) WHERE SHEETING IS NOT USED, PLACE CONCRETE FULL WIDTH OF TRENCH TO SOLID GROUND.

4) ALL CONCRETE, PIPE, FITTINGS, ETC. SHALL BE INCLUDED IN PRICE FOR EACH CHIMNEY.

5) IF STREET LATERAL IS CALLED FOR, INCLUDE COST OF HORIZONTAL PIPE AND FITTINGS IN COST OF LATERAL.

CONNECTION CHIMNEY

NOT TO SCALE

DRAWN BY:	MJB	CITY OF NEW BRITAIN DEPARTMENT OF PUBLIC WORKS STANDARD DETAIL
DATE:	04/10/2008	
APPROVED BY:	MEM	
DATE:	05/05/2008	

N:\Shared Documents\Public Works\Library\Standard Details\Details-ACAD\Section 2\det 2-23 chimney.dwg

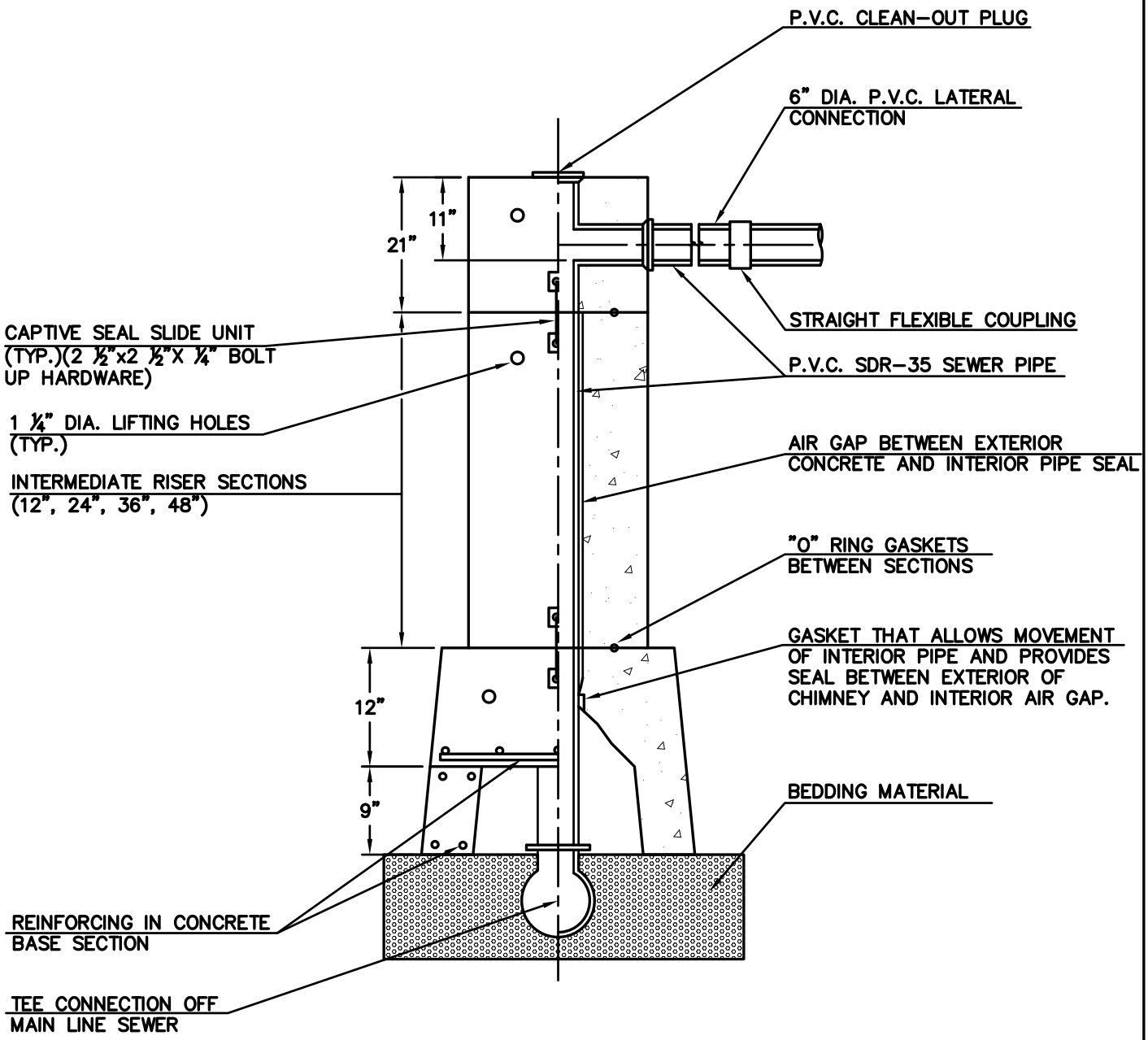

PRECAST CHIMNEY

NOT TO SCALE

DRAWN BY:	MJB	CITY OF NEW BRITAIN DEPARTMENT OF PUBLIC WORKS STANDARD DETAIL
DATE:	03/17/2008	
APPROVED BY:	MEM	
DATE:	05/05/2008	

N:\Shared Documents\Public Works\Library\Standard Details\Details-ACAD\Section 2\det 2-24 precast chimney detail.dwg

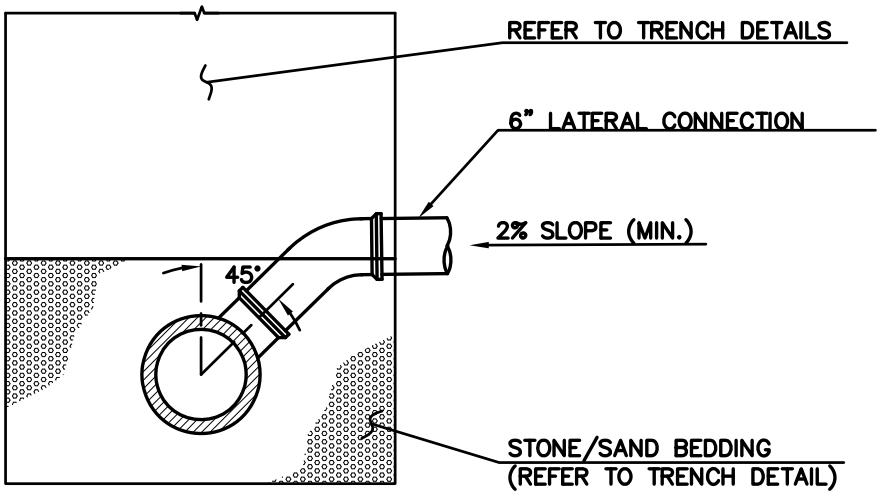

SECTION

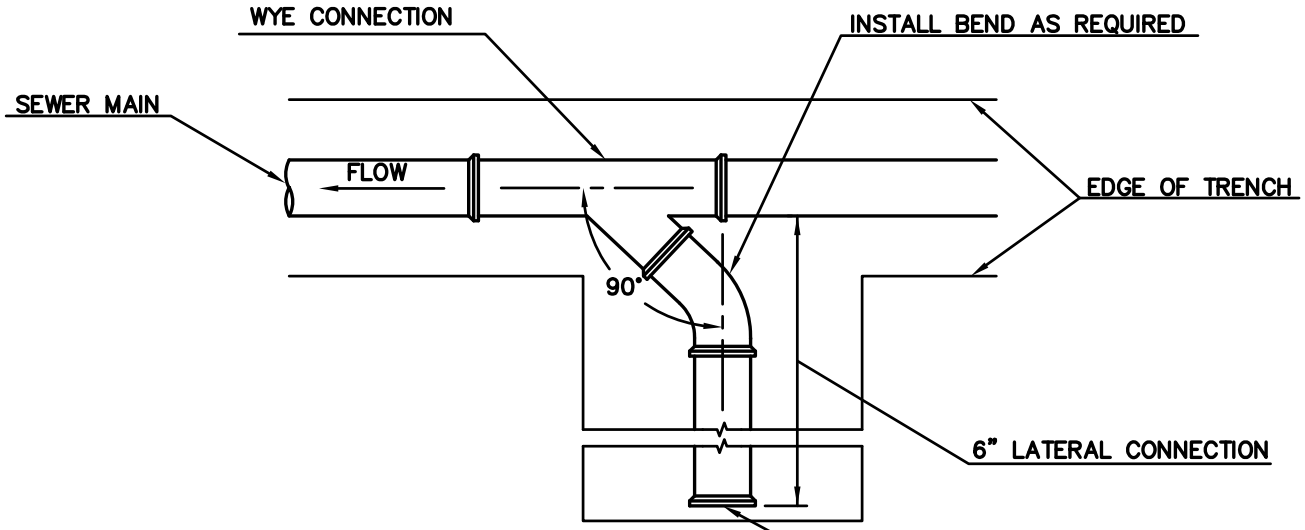

PLAN

CONNECT TO BUILDING OR CAP FOR FUTURE. PROVIDE AS-BUILT TIES AND 1" DIA. REINFORCING BAR, AS DESCRIBED IN THE STANDARD SPECIFICATION OR DIRECTED BY THE ENGINEER.

SEWER LATERAL

NOT TO SCALE

DRAWN BY:	MJB	CITY OF NEW BRITAIN DEPARTMENT OF PUBLIC WORKS STANDARD DETAIL
DATE:	03/17/2008	
APPROVED BY:	MEM	
DATE:	05/05/2008	

N:\Shared Documents\Public Works\Library\Standard Details\Details-ACAD\Section 2\det 2-25 sewer lateral.dwg

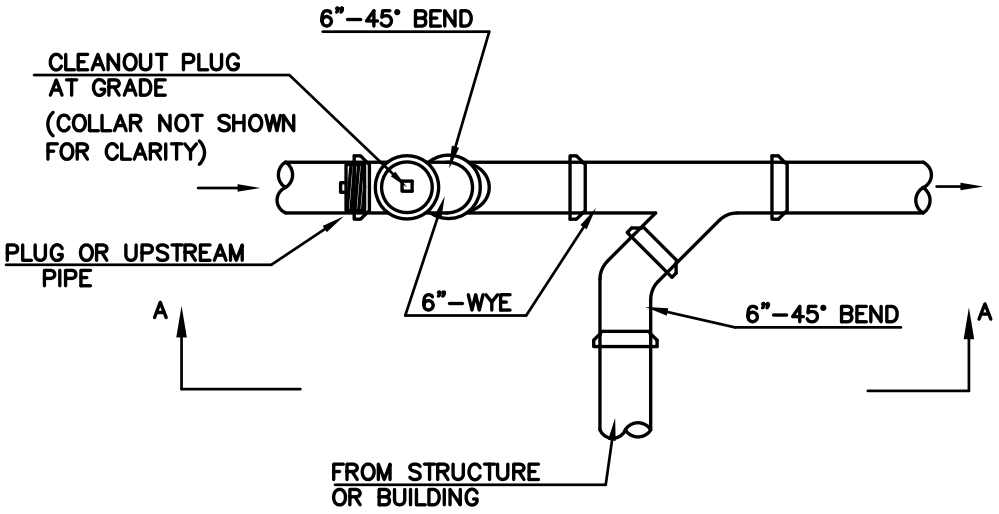

PLAN

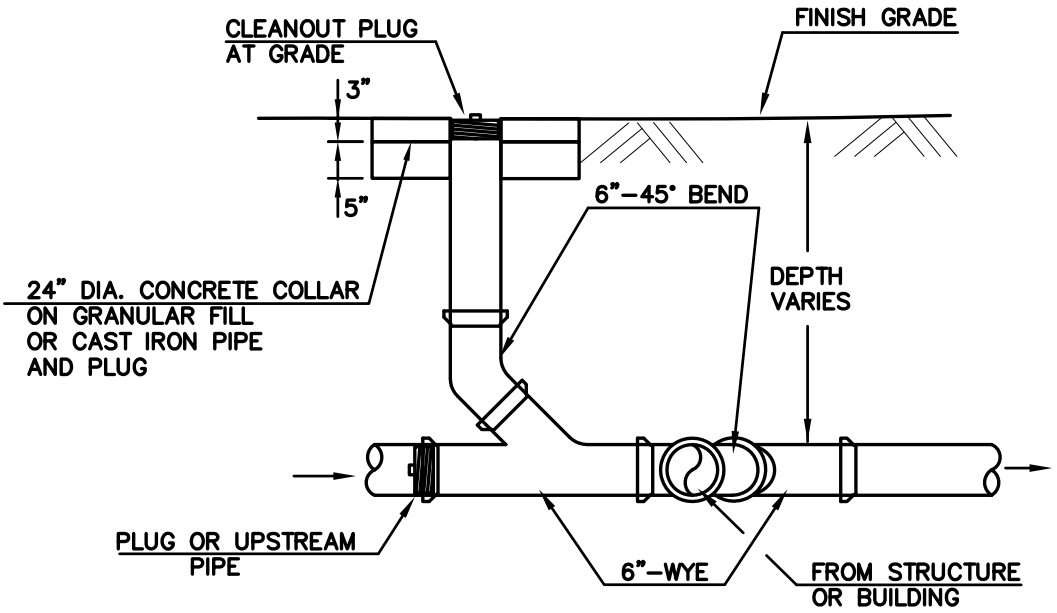

SECTION A–A

1. ALL PIPE AND FITTINGS SHALL CONFORM TO CITY OF NEW BRITAIN STANDARD SPECIFICATIONS.

2. ALL PLUGS SHALL BE OF THE THREADED TYPE.

3. THIS DETAIL COULD ALSO BE USED FOR UNDERDRAIN CLEAN–OUT AS DIRECTED.

SEWER LATERAL CLEAN–OUT

NOT TO SCALE

DRAWN BY:	MJB	CITY OF NEW BRITAIN DEPARTMENT OF PUBLIC WORKS STANDARD DETAIL
DATE:	02/01/2008	
APPROVED BY:	MEM	
DATE:	05/05/2008	

N:\Shared Documents\Public Works\Library\Standard Details\Details-ACAD\Section 2\det 2-26 sewer lateral clean out.dwg

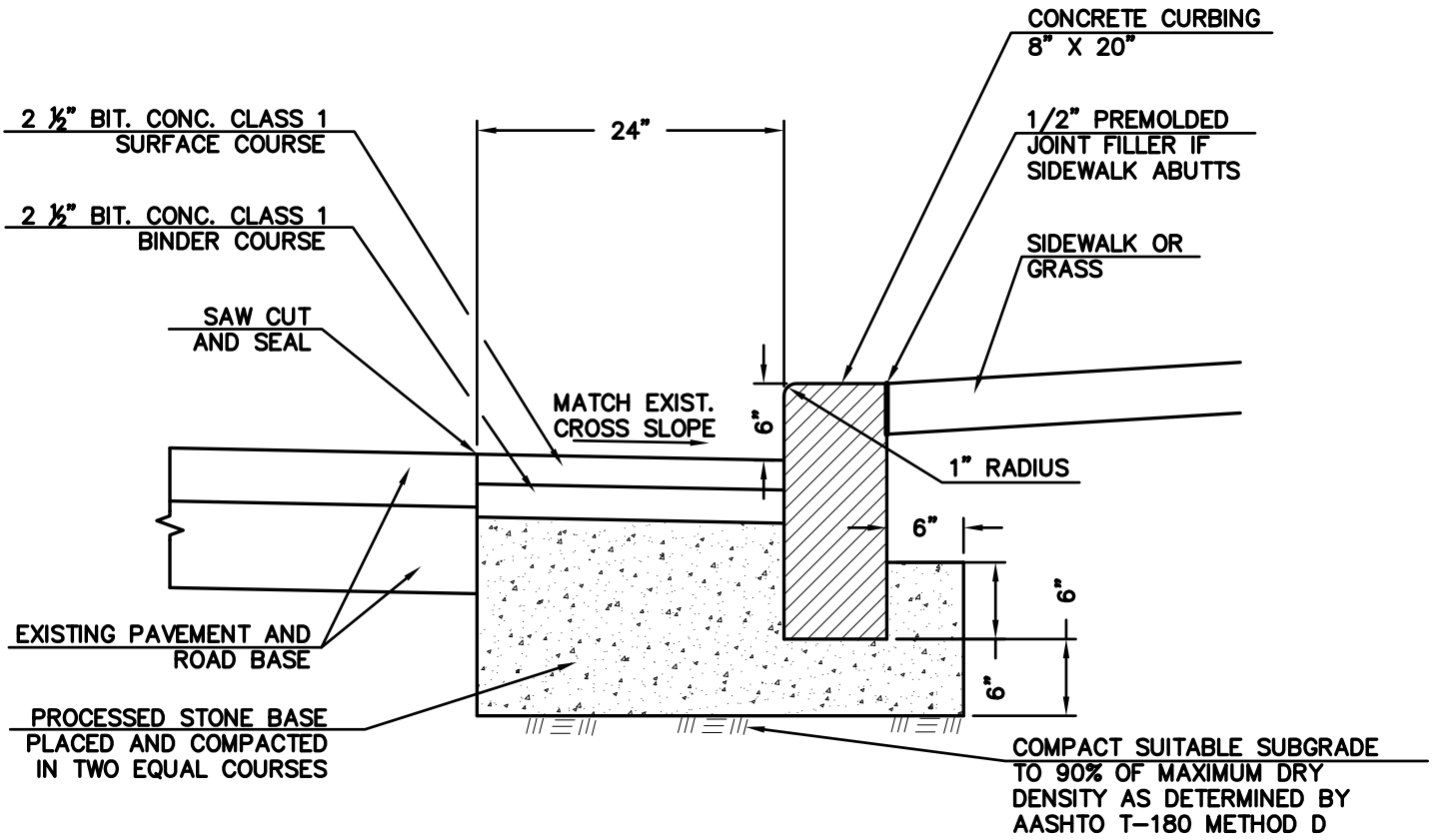

NEW CURBING ON EXISTING ROAD

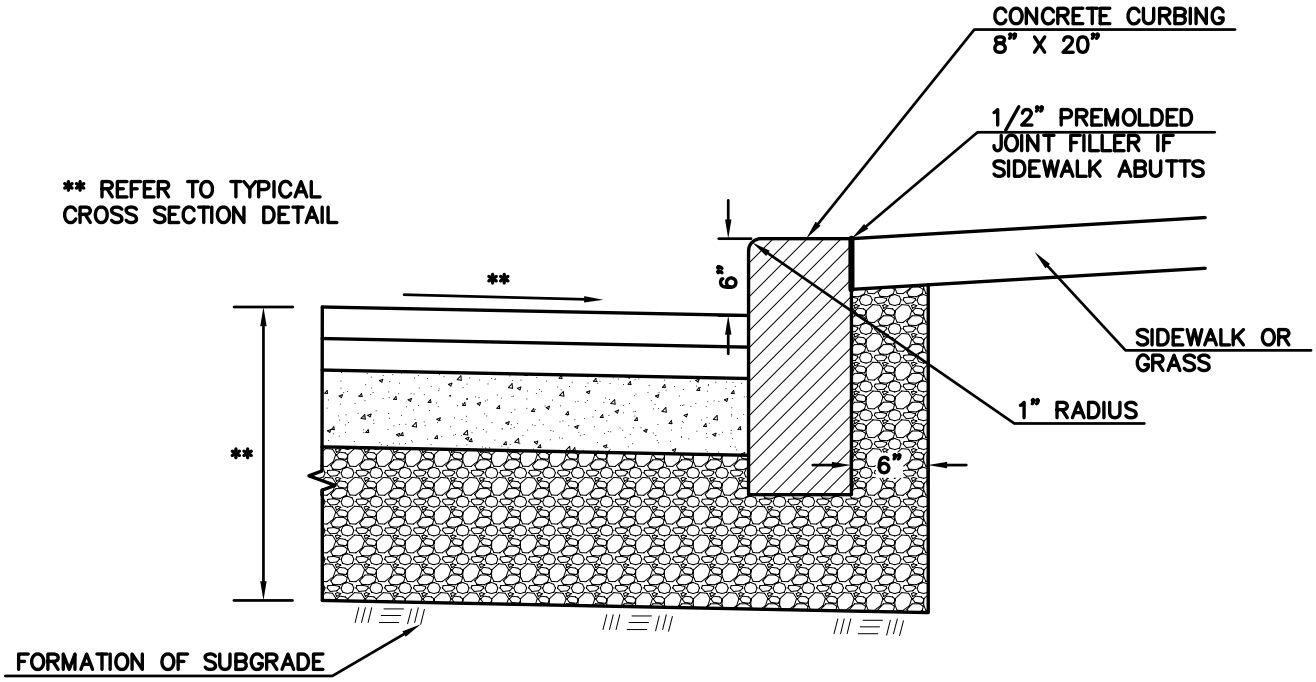

NEW ROAD CONSTRUCTION

CONCRETE CURBING

NOT TO SCALE

DRAWN BY:	MJB	CITY OF NEW BRITAIN DEPARTMENT OF PUBLIC WORKS STANDARD DETAIL
DATE:	04/08/2008	
APPROVED BY:	MEM	
DATE:	05/05/2008	

N:\Shared Documents\Public Works\Library\Standard Details\Details-ACAD\Section 3\det 3-1 conc curb.dwg

NOTES:
RESIDENTIAL DRIVEWAYS = 6" THICK CONCRETE
ALL OTHER DRIVEWAYS = 8" THICK CONCRETE

DRIVEWAY WIDTHS – MIN. 10', MAX. 20'
(DRIVEWAY WIDTHS GREATER THAN 20' REQUIRE APPROVAL FROM THE CITY ENGINEER)

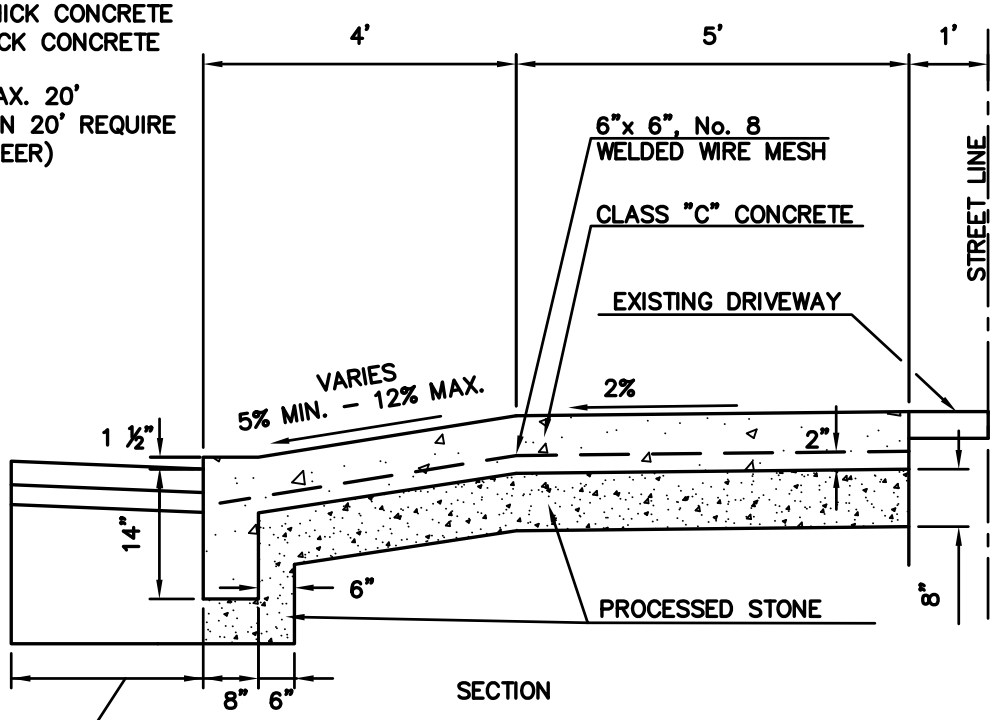

SECTION

REFER TO CONCRETE CURBING DETAIL FOR NEW DRIVEWAY RAMP ON EXISTING ROAD OR NEW ROAD CONSTRUCTION

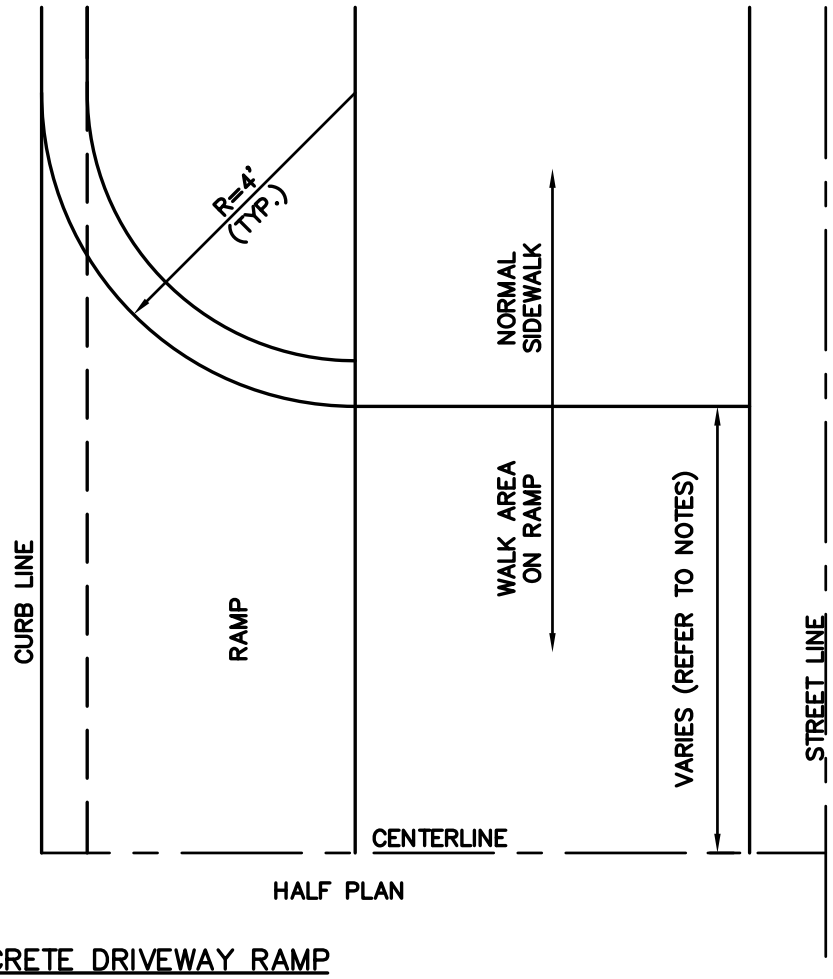

HALF PLAN

CONCRETE DRIVEWAY RAMP

NOT TO SCALE

DRAWN BY:	MJB	CITY OF NEW BRITAIN DEPARTMENT OF PUBLIC WORKS STANDARD DETAIL
DATE:	04/08/2008	
APPROVED BY:	MEM	
DATE:	05/05/2008	

N:\Shared Documents\Public Works\Library\Standard Details\Details-ACAD\Section 3\det 3-2 conc drive ramp.dwg

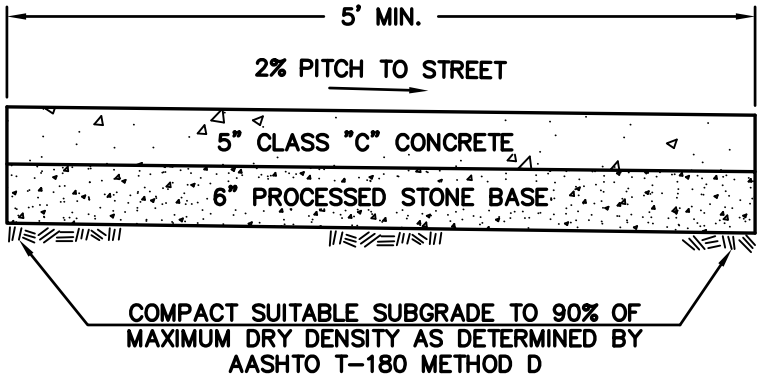

WALK SECTION

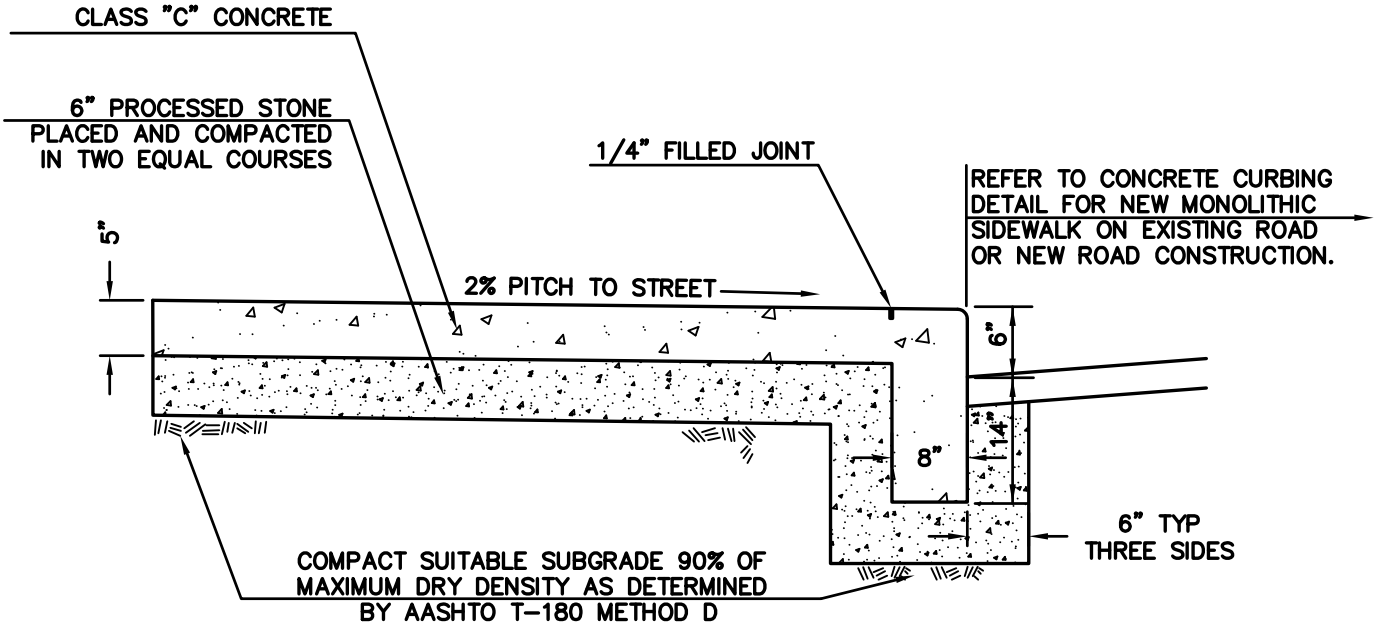

MONOLITHIC WALK AND CURB SECTION

CONCRETE SIDEWALK TYPICAL SECTIONS

NOT TO SCALE

DRAWN BY:	MJB	CITY OF NEW BRITAIN DEPARTMENT OF PUBLIC WORKS STANDARD DETAIL
DATE:	03/13/2008	
APPROVED BY:	MEM	
DATE:	05/05/2008	

N:\Shared Documents\Public Works\Library\Standard Details\Details-ACAD\Section 3\det 3-3 conc walk section.dwg

N:\Shared Documents\Public Works\Library\Standard Details\Details-ACAD\Section 3\det 3-4 walk joint detail.dwg

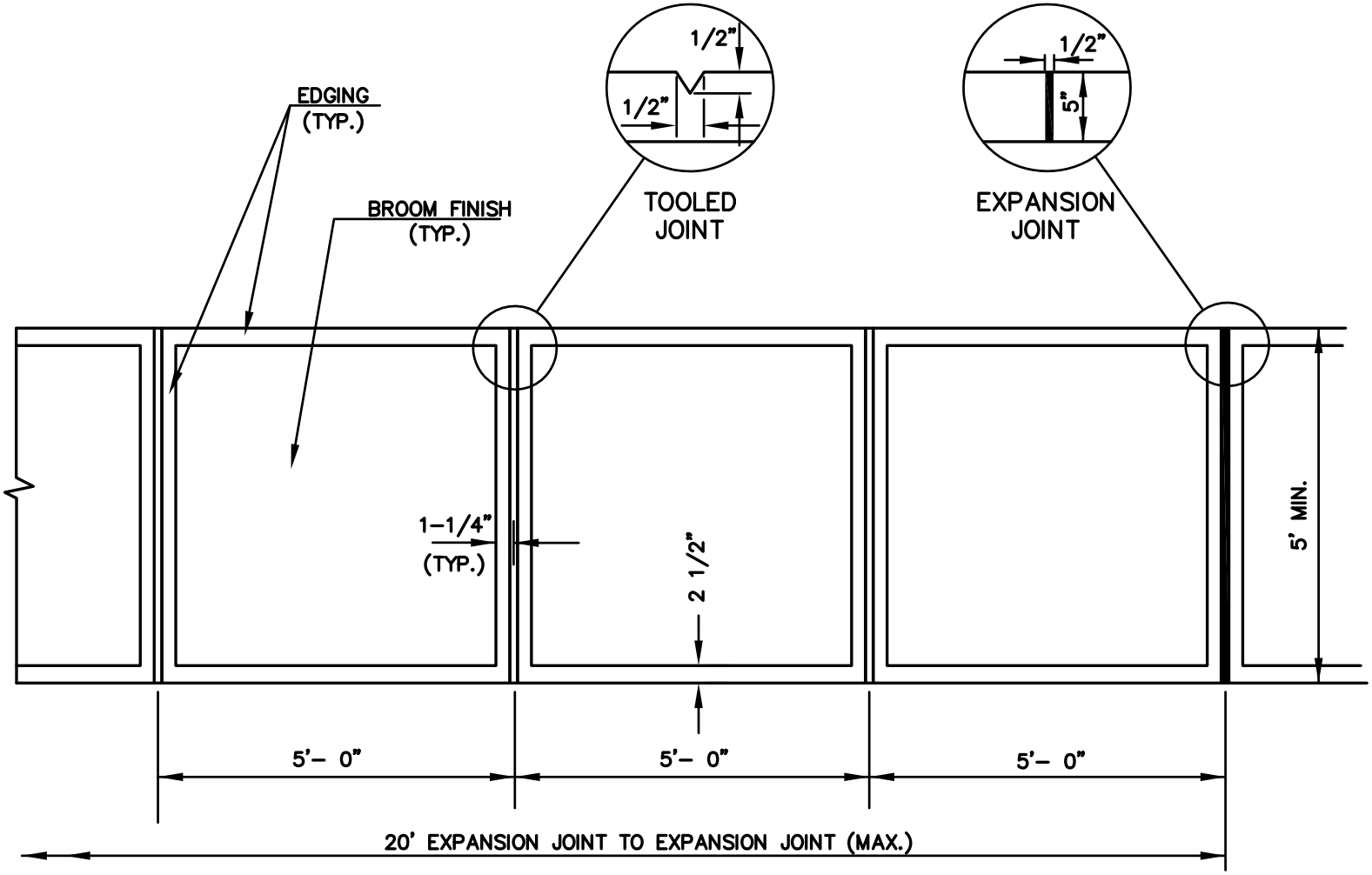

CONCRETE SIDEWALK JOINTING AND EDGING

NOT TO SCALE

DRAWN BY:	MJB
DATE:	11/26/2007
APPROVED BY:	MEM
DATE:	05/05/2008

CITY OF NEW BRITAIN
DEPARTMENT OF PUBLIC WORKS
STANDARD DETAIL

N:\Shared Documents\Public Works\Library\Standard Details\Details-ACAD\Section 3\det 3-5 sidewalk ramp section.dwg

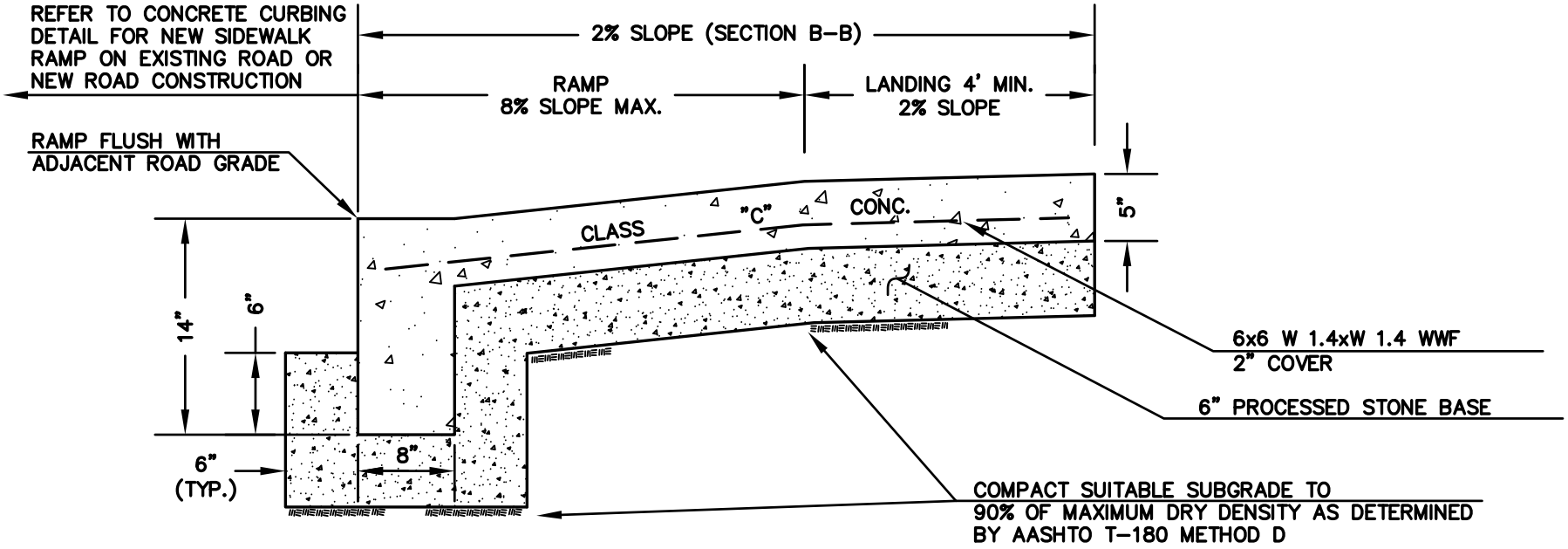

SECTION A-A (SECTION B-B)

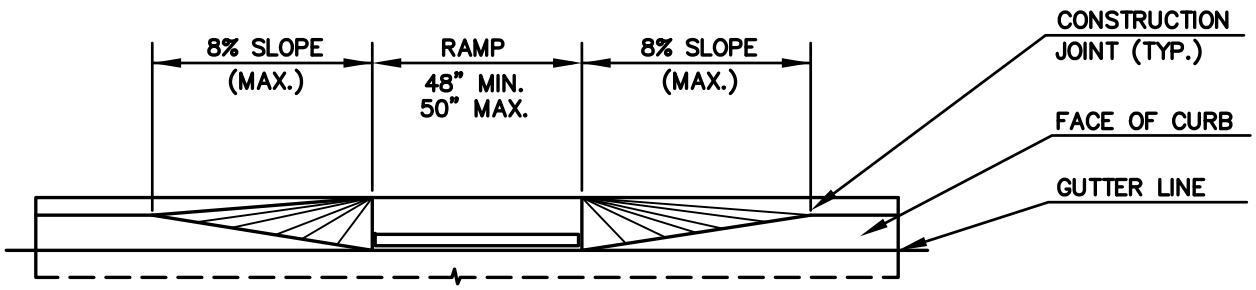

SECTION C-C

SIDEWALK RAMP TYPICAL SECTIONS

NOT TO SCALE

DRAWN BY:	MJB
DATE:	04/08/2008
APPROVED BY:	MEM
DATE:	05/05/2008

CITY OF NEW BRITAIN
DEPARTMENT OF PUBLIC WORKS
STANDARD DETAIL

N:\Shared Documents\Public Works\Library\Standard Details\Details-ACAD\Section 3\det 3-6 sidewalk ramp typ 1.dwg

NOTE:
RAMP CONFIGUATIONS MAY VARY BASED ON EXISTING LOCATIONS.
DURING CONSTRUCTION, EACH RAMP SHALL BE LAYED OUT TO BEST FIT
ACTUAL FIELD CONDITIONS AND CONFORM TO CURRENT ADA STANDARDS.

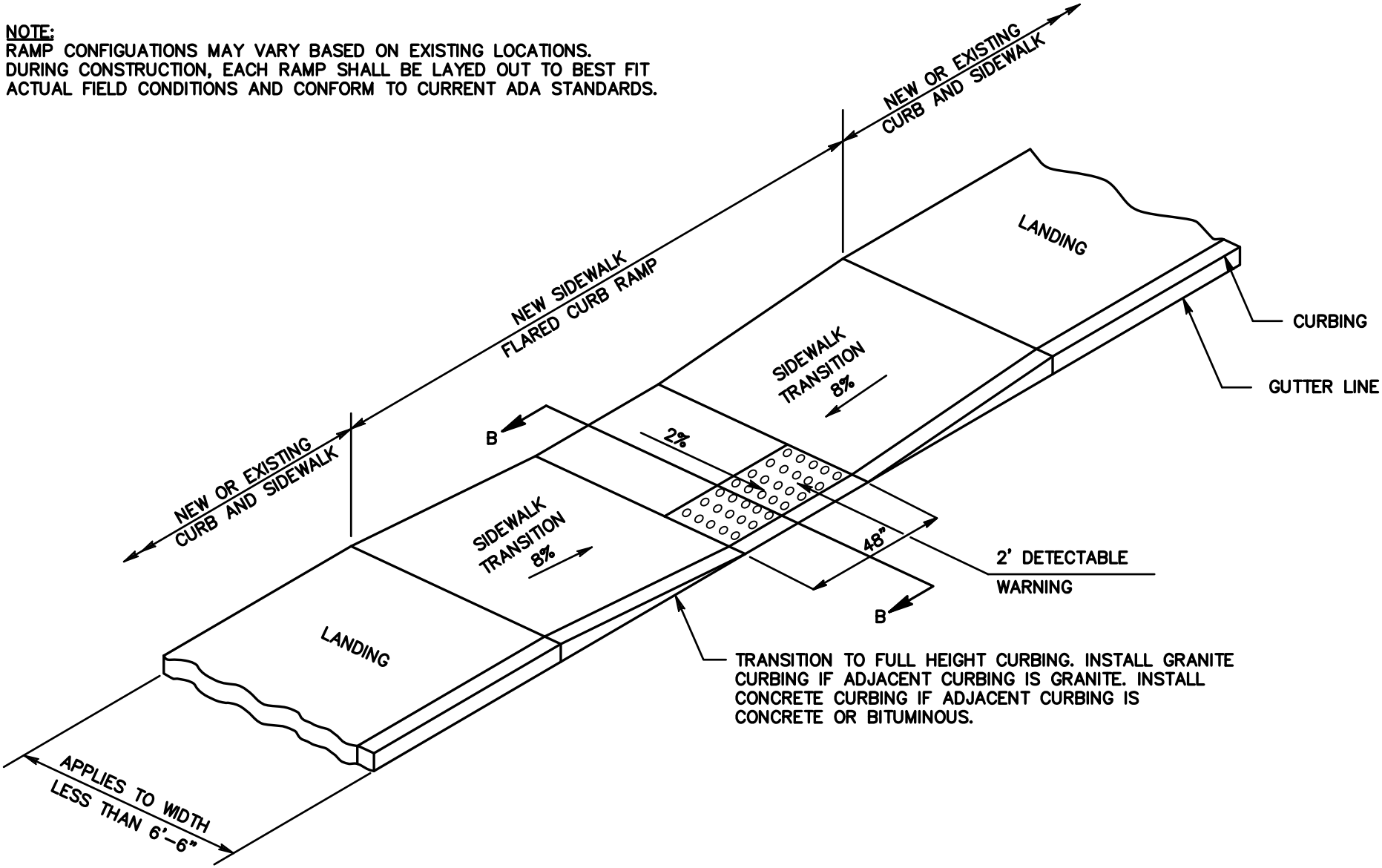

SIDEWALK RAMP TYPE 1

NOT TO SCALE

DRAWN BY:	MJB
DATE:	03/13/2008
APPROVED BY:	MEM
DATE:	05/05/2008

CITY OF NEW BRITAIN
DEPARTMENT OF PUBLIC WORKS
STANDARD DETAIL

N:\Shared Documents\Public Works\Library\Standard Details\Details-ACAD\Section 3\det 3-7 sidewalk ramp typ 2.dwg

NOTE:
RAMP CONFIGUATIONS MAY VARY BASED ON EXISTING LOCATIONS.
DURING CONSTRUCTION, EACH RAMP SHALL BE LAYED OUT TO BEST FIT
ACTUAL FIELD CONDITIONS AND CONFORM TO CURRENT ADA STANDARDS.

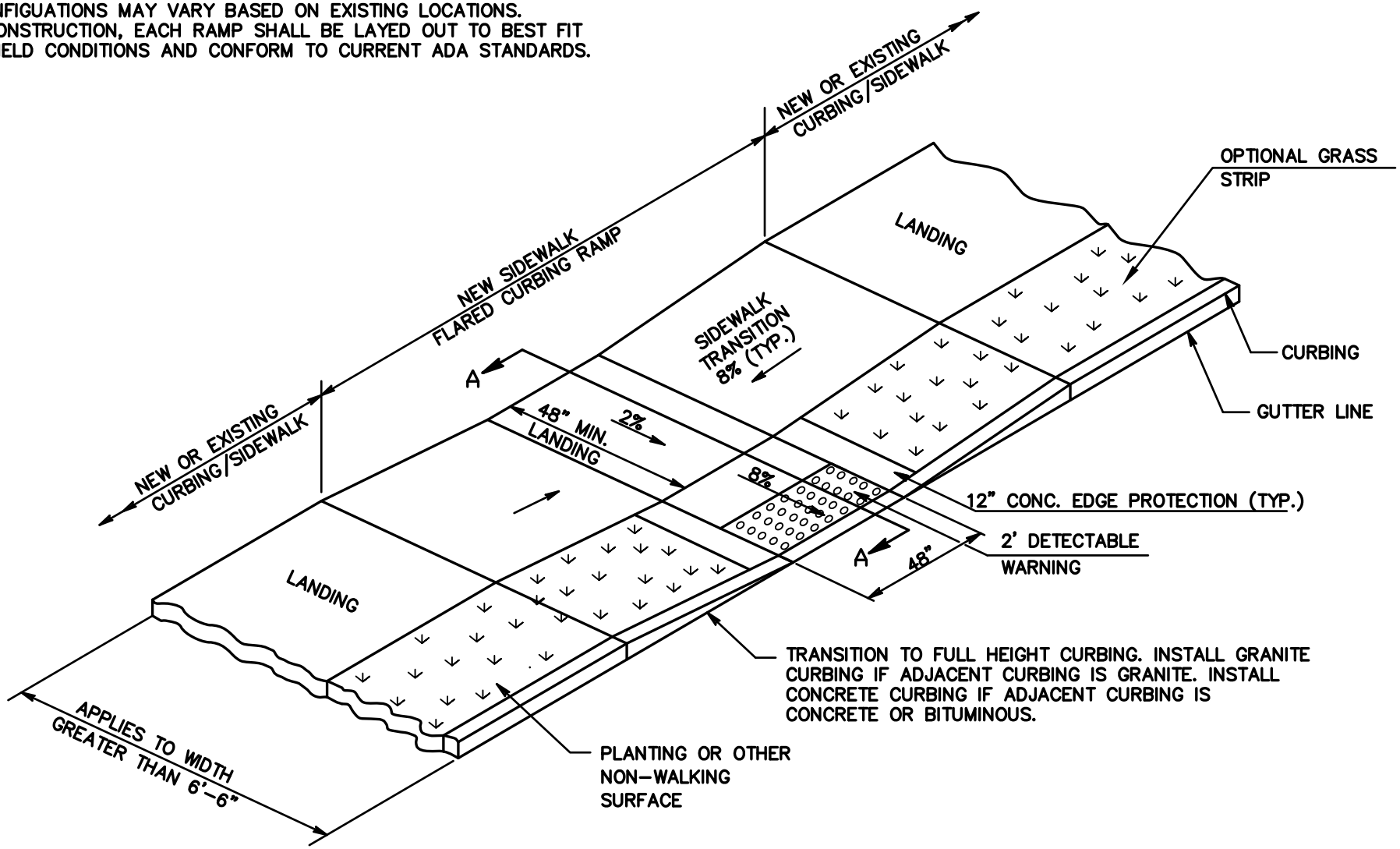

SIDEWALK RAMP TYPE 2

NOT TO SCALE

DRAWN BY:	MJB
DATE:	03/13/2008
APPROVED BY:	MEM
DATE:	05/05/2008

CITY OF NEW BRITAIN
DEPARTMENT OF PUBLIC WORKS
STANDARD DETAIL

N:\Shared Documents\Public Works\Library\Standard Details\Details-ACAD\Section 3\det 3-8 sidewalk ramp typ 3.dwg

NOTE:
RAMP CONFIGUATIONS MAY VARY BASED ON EXISTING LOCATIONS.
DURING CONSTRUCTION, EACH RAMP SHALL BE LAYED OUT TO BEST FIT
ACTUAL FIELD CONDITIONS AND CONFORM TO CURRENT ADA STANDARDS.

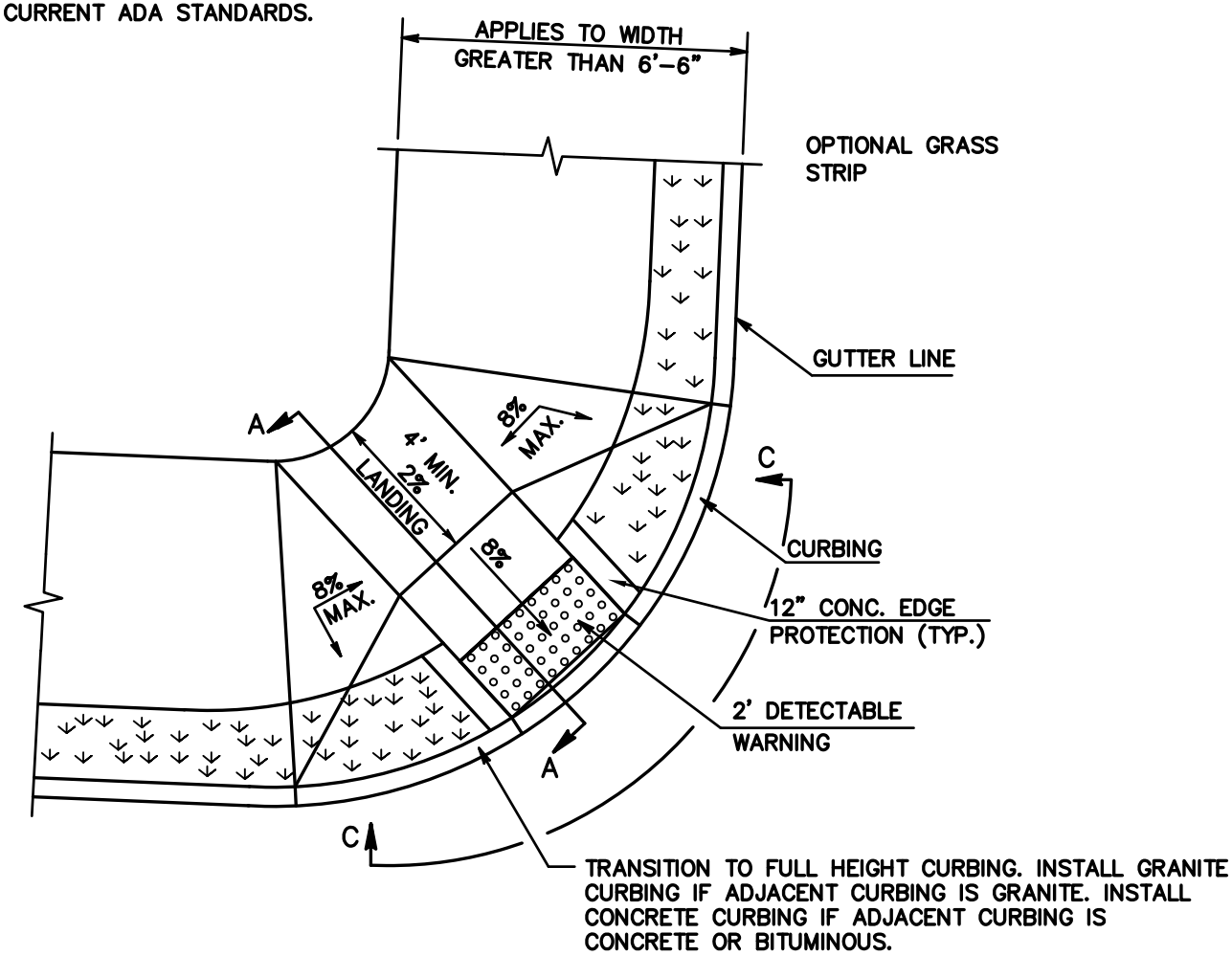

SIDEWALK RAMP TYPE 3

NOT TO SCALE

DRAWN BY:	MJB
DATE:	03/13/2008
APPROVED BY:	MEM
DATE:	05/05/2008

CITY OF NEW BRITAIN
DEPARTMENT OF PUBLIC WORKS
STANDARD DETAIL

N:\Shared Documents\Public Works\Library\Standard Details\Details-ACAD\Section 3\det 3-9 sidewalk ramp typ 4.dwg

NOTE:
RAMP CONFIGUATIONS MAY VARY BASED ON EXISTING LOCATIONS.
DURING CONSTRUCTION, EACH RAMP SHALL BE LAYED OUT TO BEST FIT
ACTUAL FIELD CONDITIONS AND CONFORM TO CURRENT ADA STANDARDS.

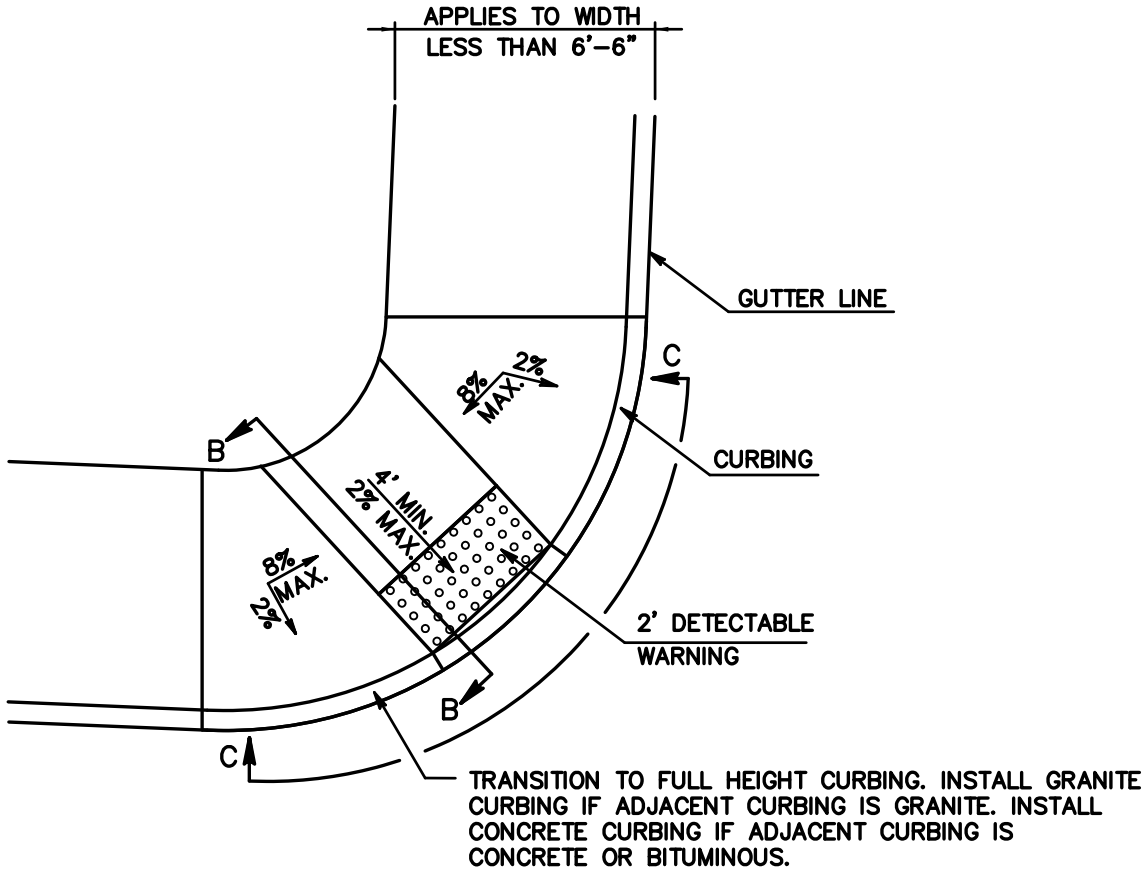

SIDEWALK RAMP TYPE 4

NOT TO SCALE

DRAWN BY:	MJB
DATE:	03/13/2008
APPROVED BY:	MEM
DATE:	05/05/2008

CITY OF NEW BRITAIN
DEPARTMENT OF PUBLIC WORKS
STANDARD DETAIL

N:\Shared Documents\Public Works\Library\Standard Details\Details-ACAD\Section 3\det 3-10 sidewalk ramp typ 5.dwg

NOTE:
RAMP CONFIGUATIONS MAY VARY BASED ON EXISTING LOCATIONS.
DURING CONSTRUCTION, EACH RAMP SHALL BE LAYED OUT TO BEST FIT
ACTUAL FIELD CONDITIONS AND CONFORM TO CURRENT ADA STANDARDS.

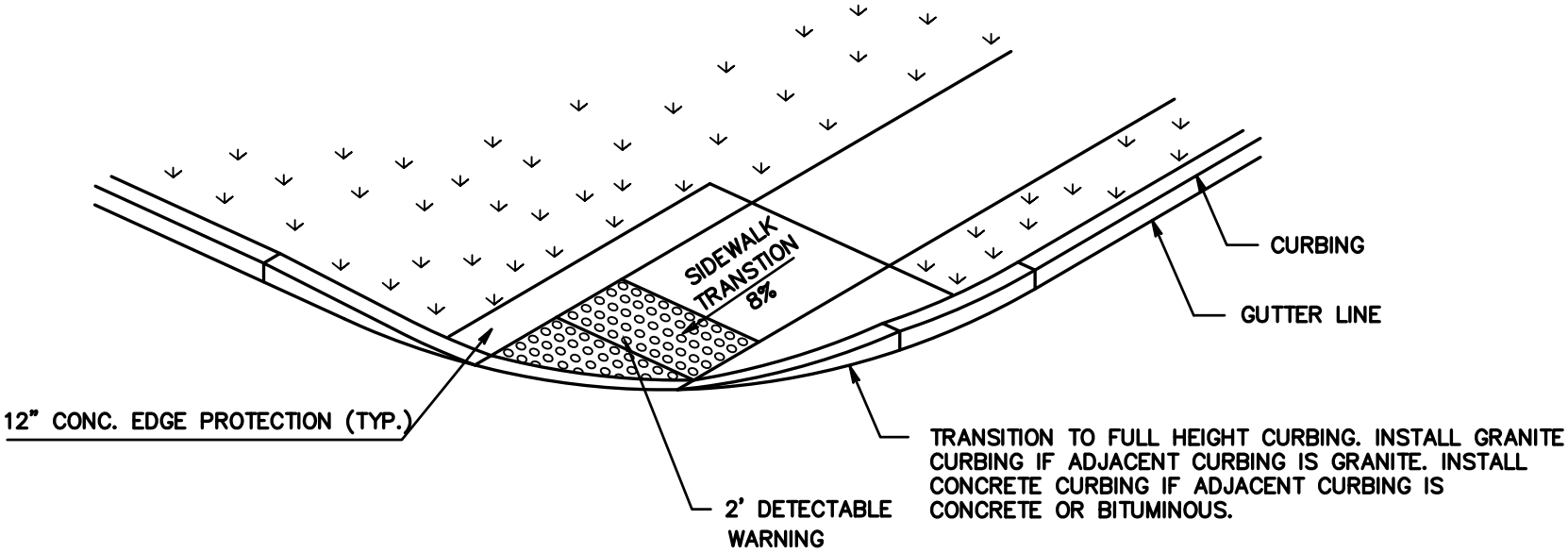

SIDEWALK RAMP TYPE 5

NOT TO SCALE

DRAWN BY:	MJB
DATE:	03/13/2008
APPROVED BY:	MEM
DATE:	05/05/2008

CITY OF NEW BRITAIN
DEPARTMENT OF PUBLIC WORKS
STANDARD DETAIL

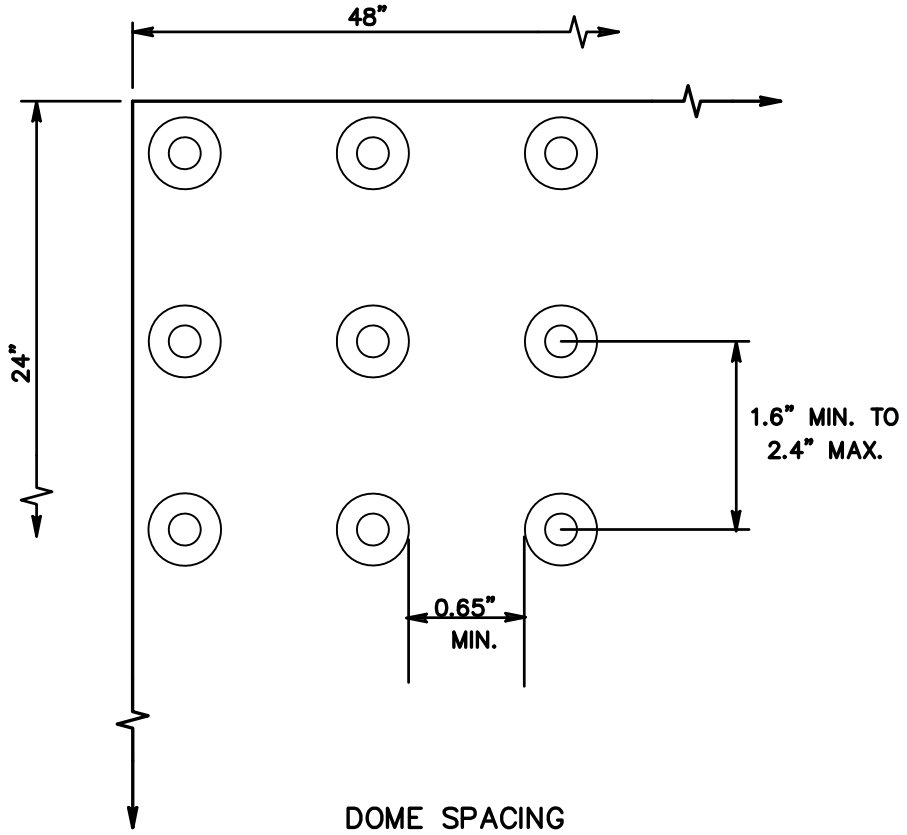

DOME SPACING

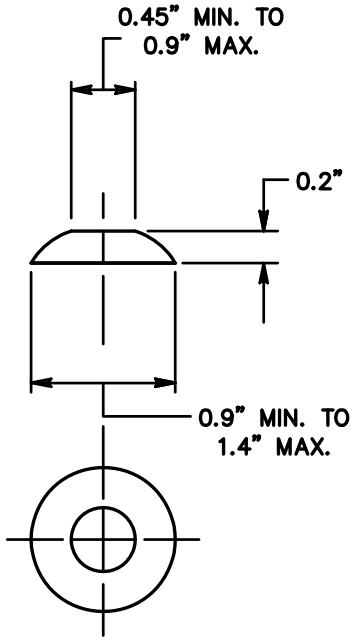

DOME SECTION

SIDEWALK RAMP DETECTABLE WARNING DETAIL

NOT TO SCALE

DRAWN BY:	MJB	CITY OF NEW BRITAIN DEPARTMENT OF PUBLIC WORKS STANDARD DETAIL
DATE:	03/13/2008	
APPROVED BY:	MEM	
DATE:	05/05/2008	

N:\Shared Documents\Public Works\Library\Standard Details\Details-ACAD\Section 3\det 3-11 sidewalk ramp det warn.dwg

NOTES:

1) USE OF BITUMINOUS CURBING REQUIRES APPROVAL OF THE CITY ENGINEER.

2) BITUMINOUS CURBING IN CONJUNCTION WITH NEW CONSTRUCTION OR MILLING/ OVERLAY SHALL BE PLACED ON BINDER COURSE, UNLESS AN ALTERNATIVE IS APPROVED BY THE CITY ENGINEER.

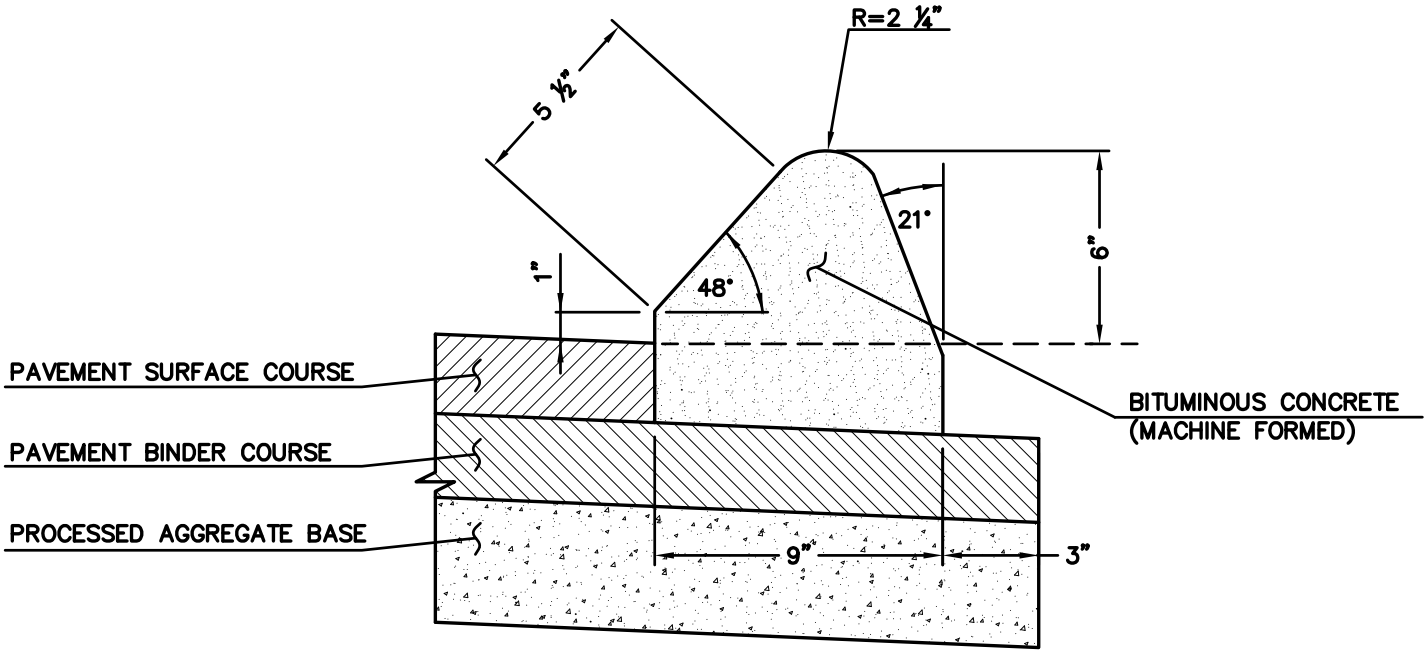

LIP CURBING

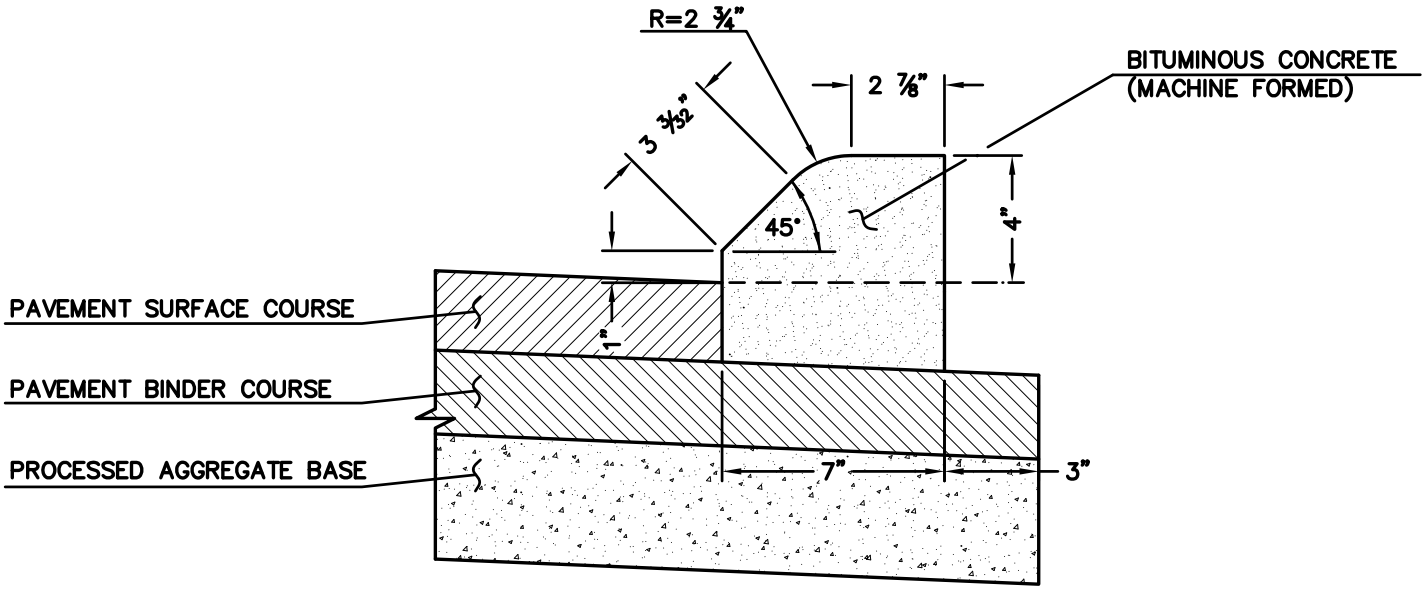

PARK CURBING

BITUMINOUS CONCRETE CURBING

NOT TO SCALE

DRAWN BY:	MJB	CITY OF NEW BRITAIN DEPARTMENT OF PUBLIC WORKS STANDARD DETAIL
DATE:	03/13/2008	
APPROVED BY:	MEM	
DATE:	05/05/2008	

N:\Shared Documents\Public Works\Library\Standard Details\Details-ACAD\Section 3\det 3-12 bit curb.dwg

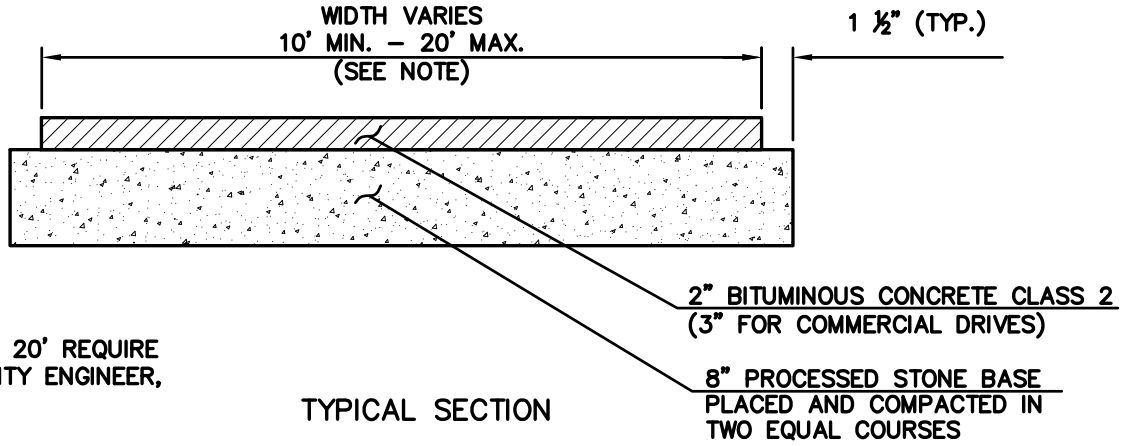

NOTE:
DRIVEWAYS WIDER THAN 20' REQUIRE APPROVAL FROM THE CITY ENGINEER,

TYPICAL SECTION

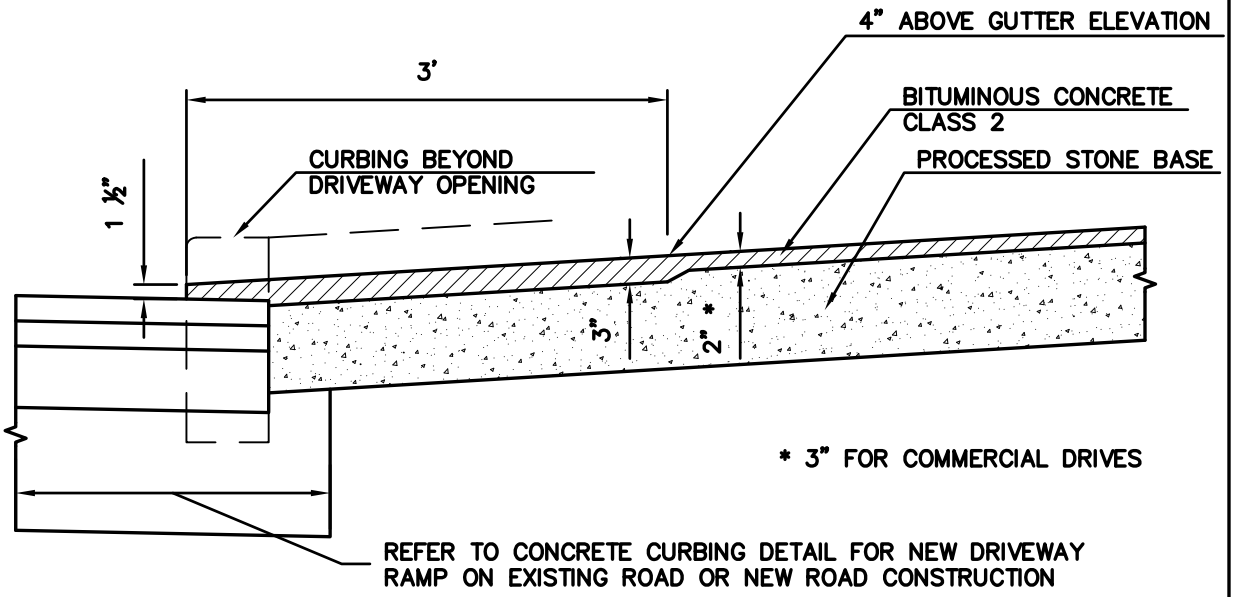

SECTION A–A

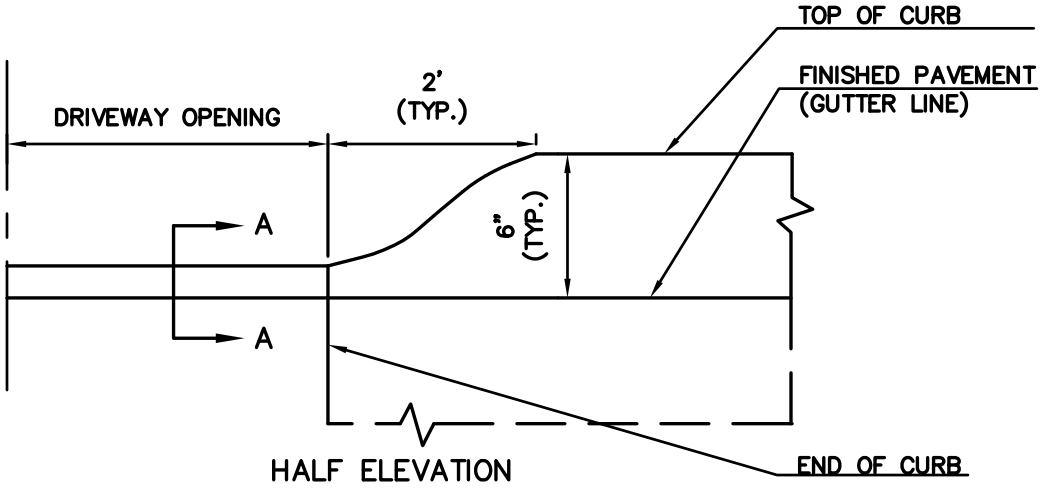

HALF ELEVATION

BITUMINOUS DRIVEWAY RAMP
NOT TO SCALE

DRAWN BY:	MJB	CITY OF NEW BRITAIN DEPARTMENT OF PUBLIC WORKS STANDARD DETAIL
DATE:	04/10/2008	
APPROVED BY:	MEM	
DATE:	05/05/2008	

N:\Shared Documents\Public Works\Library\Standard Details\Details-ACAD\Section 3\det 3-13 bit drive ramp.dwg

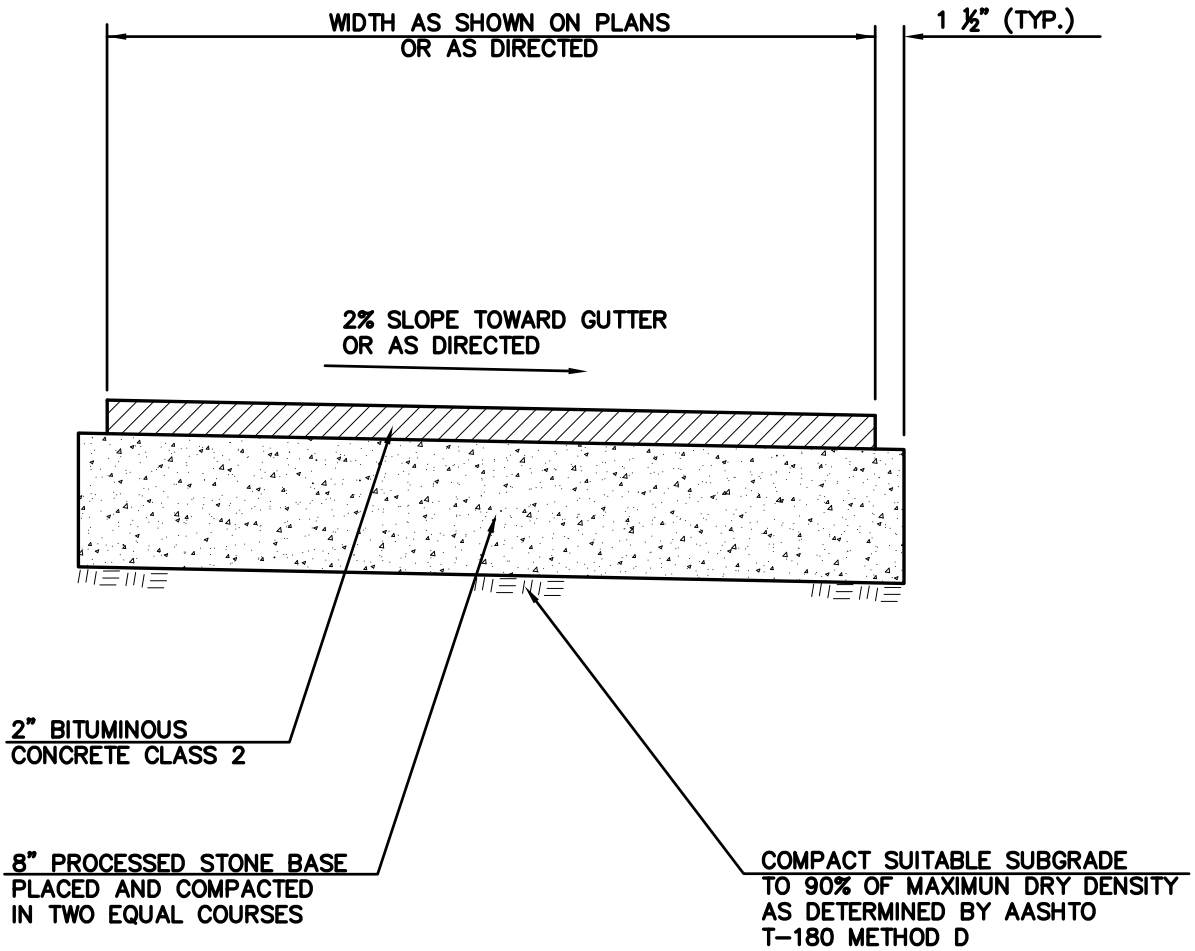

BITUMINOUS CONCRETE SIDEWALK

NOT TO SCALE

DRAWN BY:	MJB
DATE:	03/13/2008
APPROVED BY:	MEM
DATE:	05/05/2008

CITY OF NEW BRITAIN
DEPARTMENT OF PUBLIC WORKS
STANDARD DETAIL

N:\Shared Documents\Public Works\Library\Standard Details\Details-ACAD\Section 3\det 3-14 bit conc sidewalk.dwg

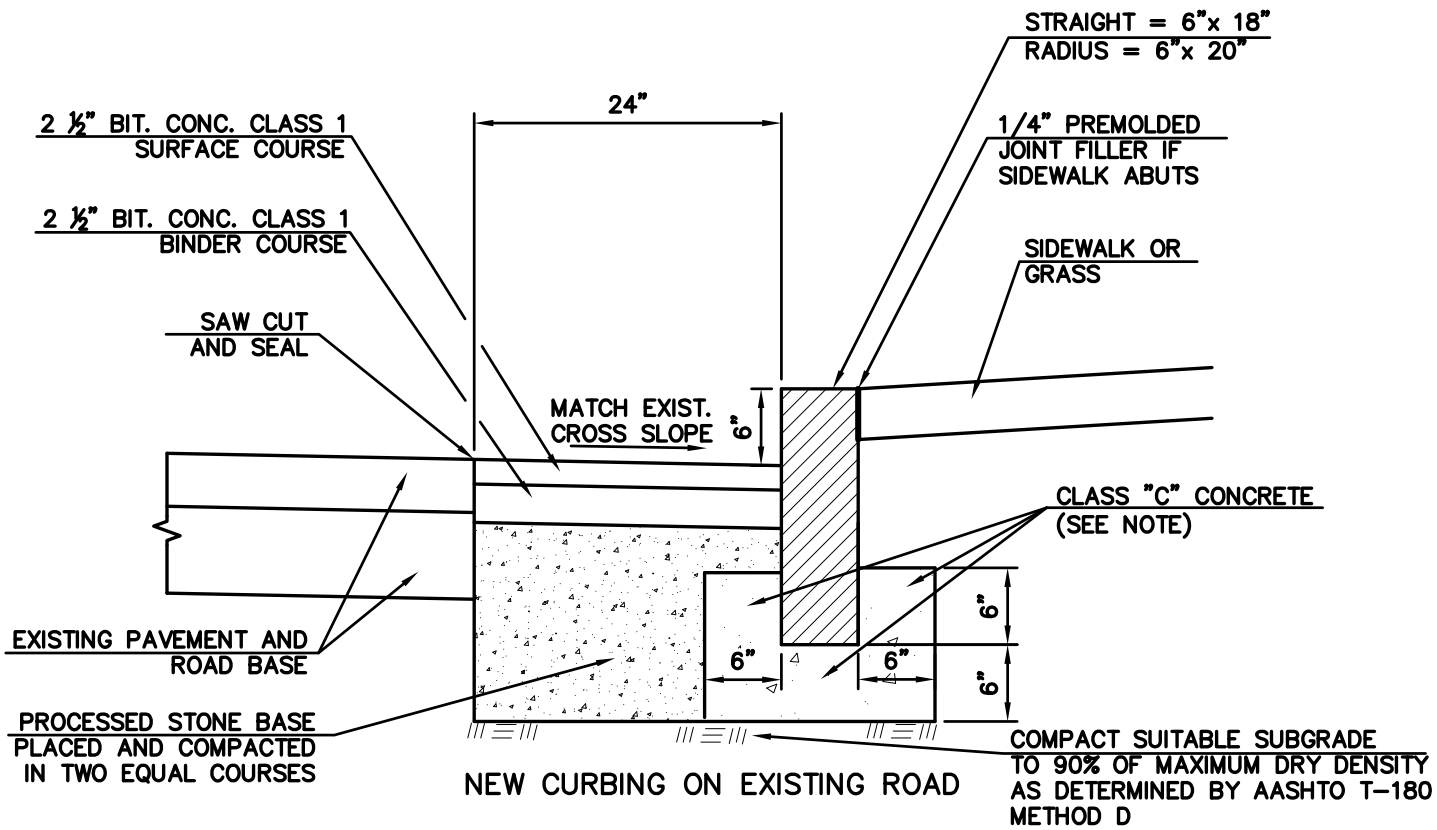

NEW CURBING ON EXISTING ROAD

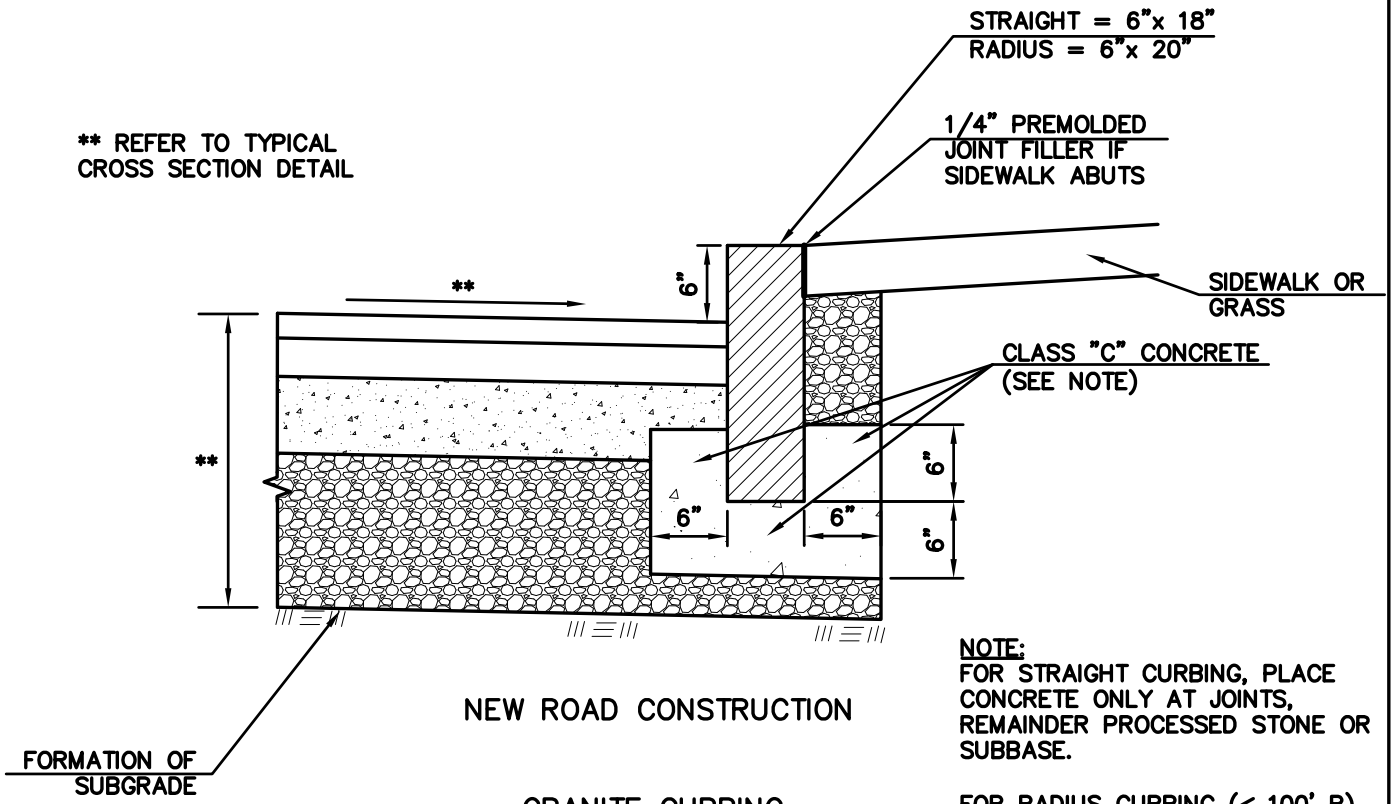

NEW ROAD CONSTRUCTION

NOTE:
FOR STRAIGHT CURBING, PLACE CONCRETE ONLY AT JOINTS, REMAINDER PROCESSED STONE OR SUBBASE.

FOR RADIUS CURBING (< 100' R), PLACE CONCRETE CONTINUOUSLY

GRANITE CURBING
STRAIGHT OR RADIUS
NOT TO SCALE

DRAWN BY:	MJB	CITY OF NEW BRITAIN DEPARTMENT OF PUBLIC WORKS STANDARD DETAIL
DATE:	04/10/2008	
APPROVED BY:	MEM	
DATE:	05/05/2008	

N:\Shared Documents\Public Works\Library\Standard Details\Details-ACAD\Section 3\det 3-15 granite curbing.dwg

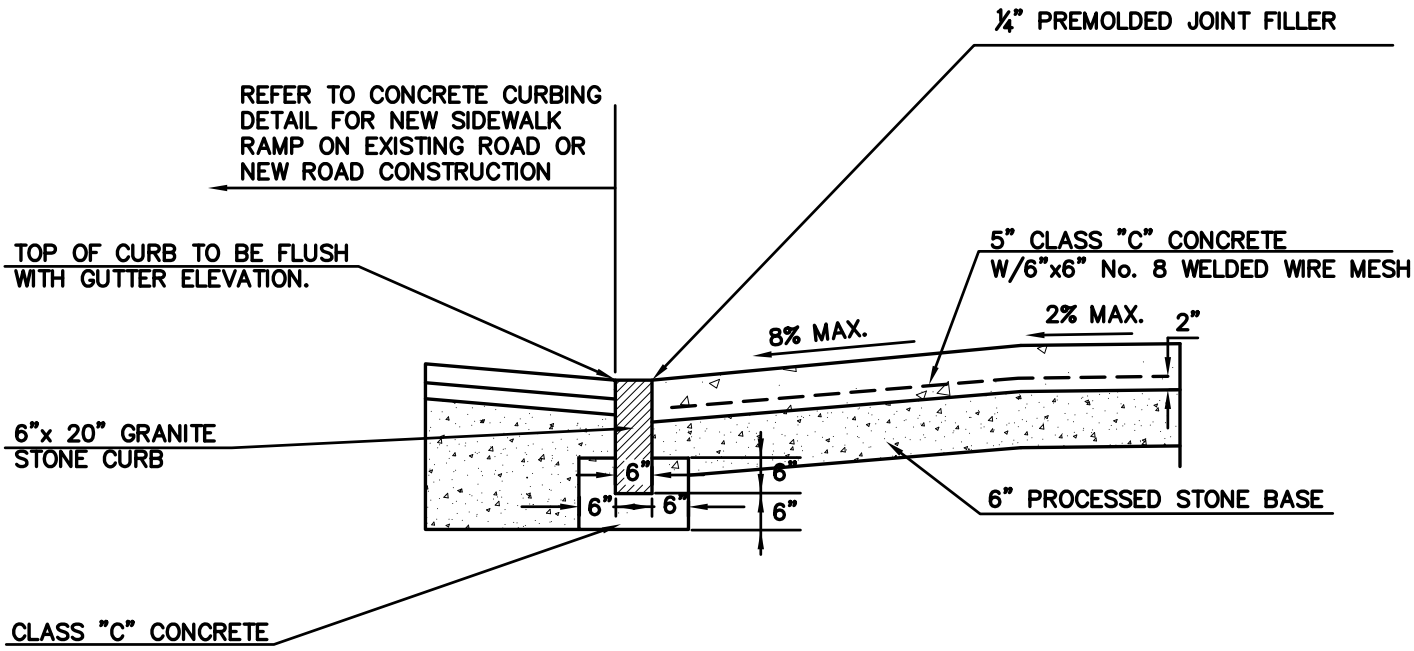

NOTES:

1) COST OF EXPANSION JOINT FILLER SHALL BE INCLUDED IN UNIT COST FOR PEDESTRIAN RAMP.
2) CONCRETE SHALL HAVE COURSE BROOM FINISH TRANSVERSE TO THE SLOPE OF THE RAMP.
3) GRANITE CURB STONES ADJACENT TO RAMP REQUIRE ONE CURB CUT EACH. THE COST OF INSTALLATION OF THE GRANITE CURB, INCLUDING CLASS "C" CONCRETE, WITHIN THE PEDESTRIAN RAMP AND THE COST OF CURB CUTS SHALL BE INCLUDED IN THE UNIT PRICE BID FOR GRANITE CURBING.

TYPICAL PEDESTRIAN RAMP WITH GRANITE CURBING

NOT TO SCALE

DRAWN BY: MJB	CITY OF NEW BRITAIN DEPARTMENT OF PUBLIC WORKS STANDARD DETAIL	
DATE: 04/10/2008		
APPROVED BY:		
DATE:		

N:\Shared Documents\Public Works\Library\Standard Details\Details-ACAD\Section 3\det 3-16 ped ramp w granite curbing.dwg

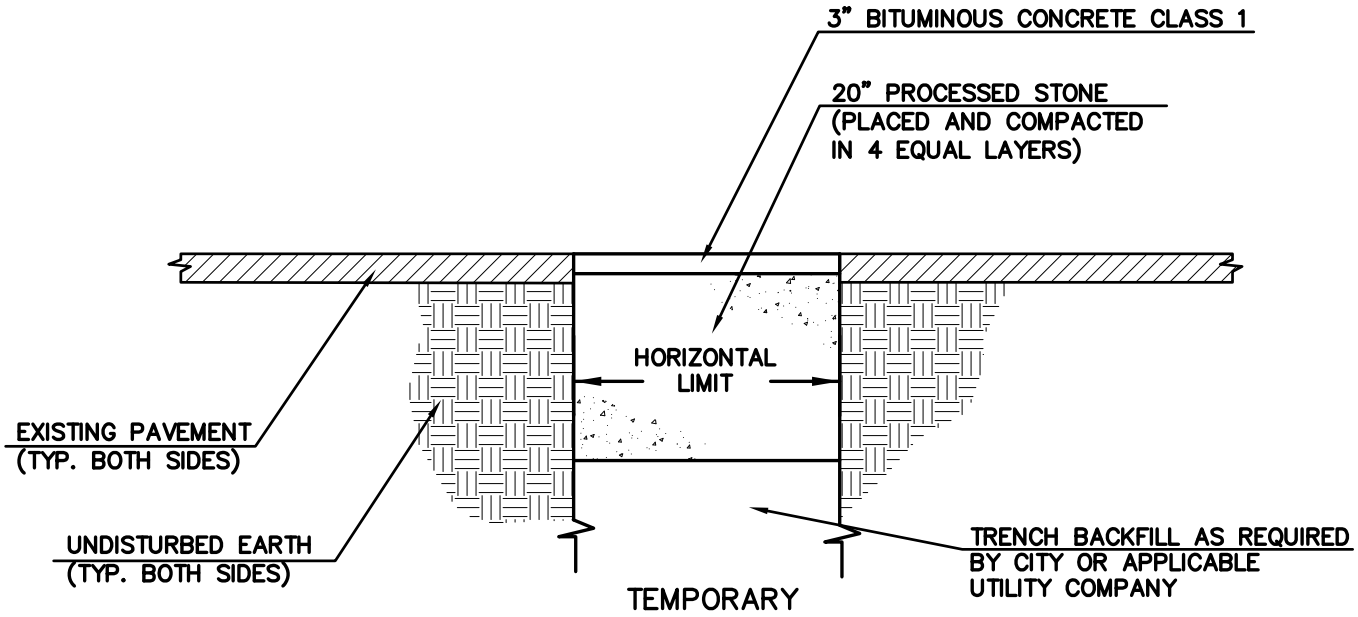

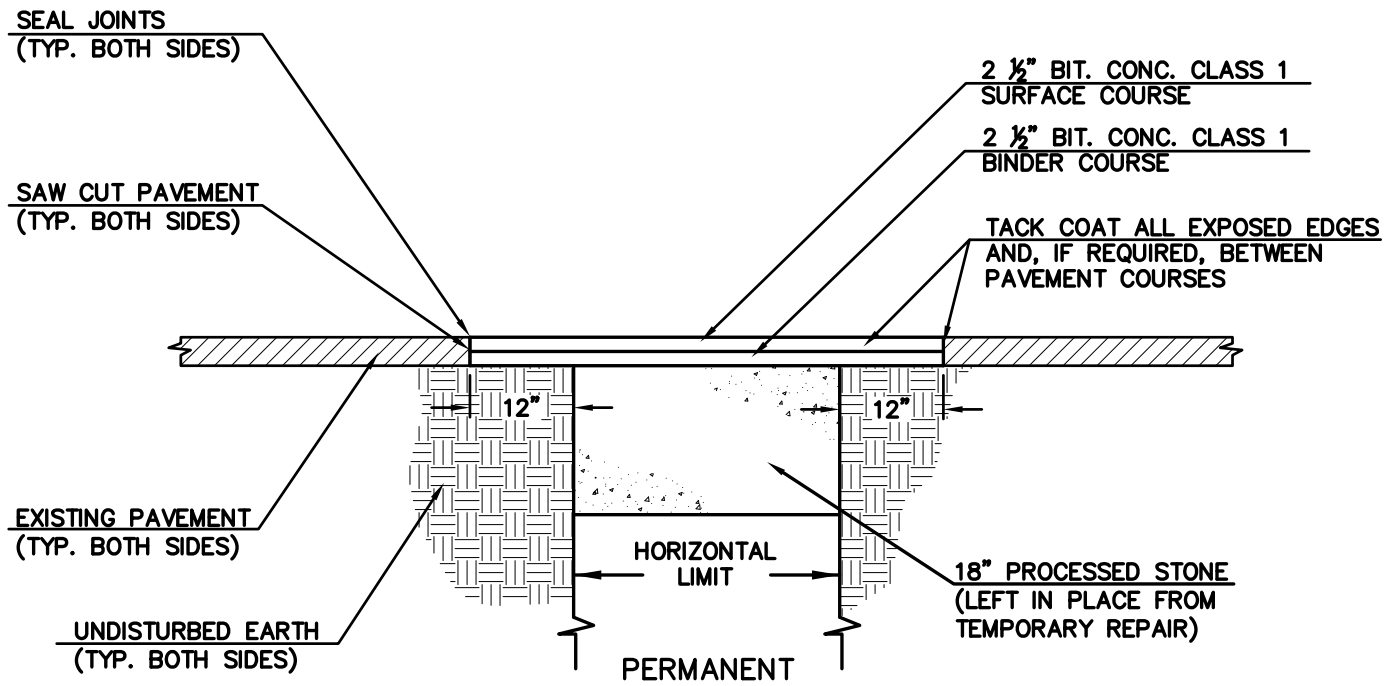

NOTES:

1) DETAILS REPRESENTED HEREIN TYPICALLY APPLY TO ALL UTILITY INSTALLATIONS EXCEPT LONGITUDINAL UTILITY TRENCHES IN EXCESS OF 50' IN LENGTH THAT RUN PARALLEL TO THE FLOW OF TRAFFIC. THESE DETAILS WOULD ALSO APPLY TO UTILITY LATERAL TRENCHES WHICH ARE PERPENDICULAR TO THE LONGITUDINAL MILLING AND OVERLAY AND EXTEND INTO OTHER TRAFFIC LANES AT A RATE OF MORE THAN 75' SEPARATION.

2) CONTRACTOR'S COST FOR TEMPORARY AND PERMANENT PAVEMENT REPAIR SHALL INCLUDE COST FOR PROVIDING MAINTENANCE AND PROTECTION OF TRAFFIC.

STANDARD UTILITY TRENCH PAVEMENT REPAIR

NOT TO SCALE

DRAWN BY:	MJB	CITY OF NEW BRITAIN DEPARTMENT OF PUBLIC WORKS STANDARD DETAIL
DATE:	02/14/2008	
APPROVED BY:	MEM	
DATE:	10/18/2007	

N:\Shared Documents\Public Works\Library\Standard Details\Details-ACAD\Section 3\det 3-17 standard utility trench restoration.dwg

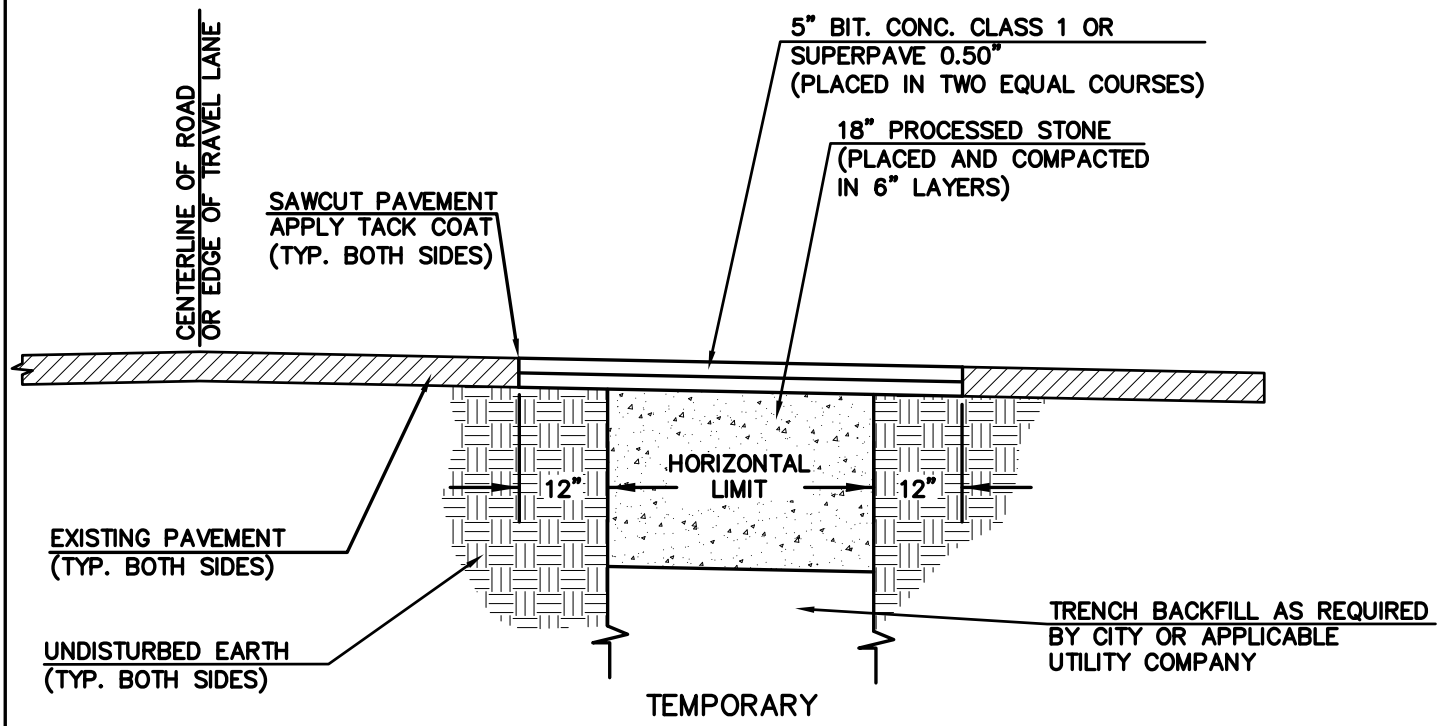

TEMPORARY

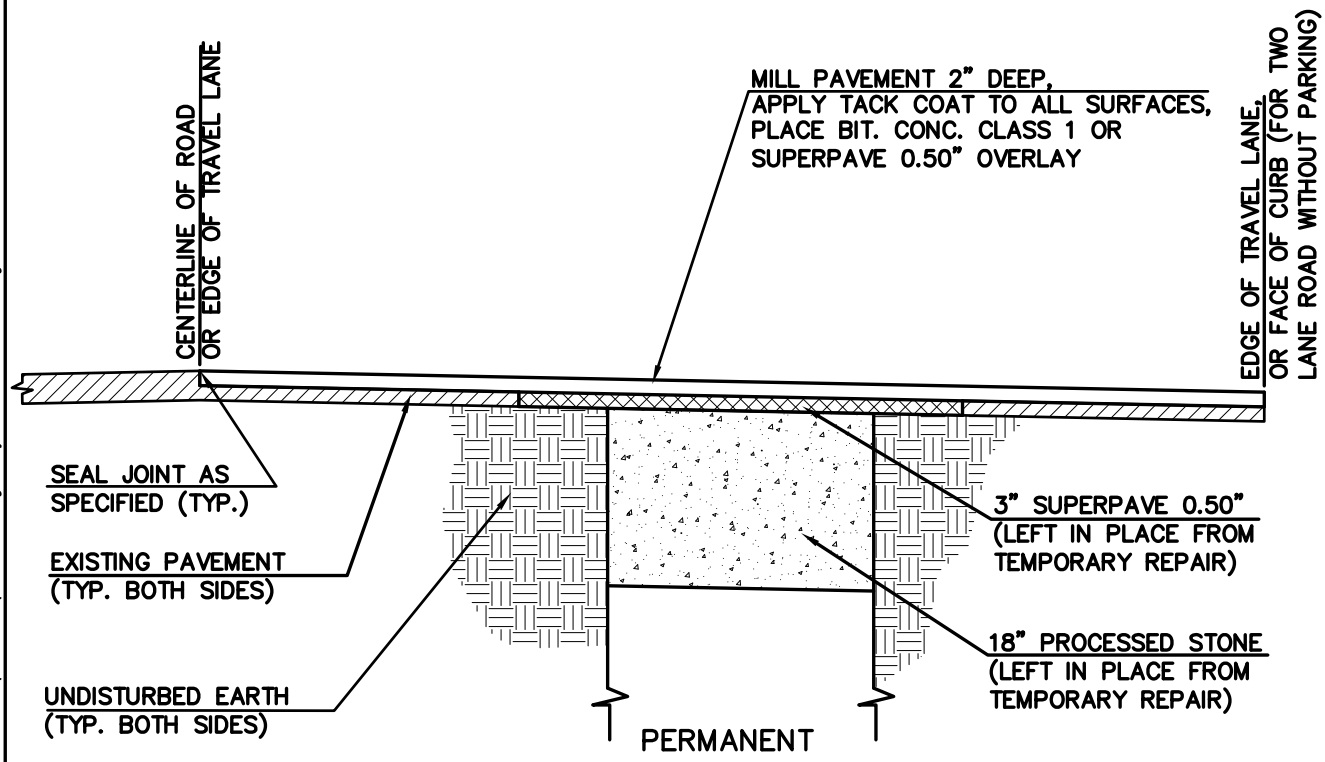

PERMANENT

NOTES:

1) DETAILS REPRESENTED HEREIN TYPICALLY APPLY TO UTILITY MAIN INSTALLATIONS IN EXCESS OF 50' IN LENGTH THAT RUN PARALLEL (LONGITUDINALLY) TO THE FLOW OF TRAFFIC, OR IN THE CASE OF SERVICE LATERALS, THOSE THAT CROSS INTO THE NEXT LANE, PERPENDICULAR TO THE FLOW OF TRAFFIC, AT A RATE OF THREE OR MORE WITH LESS THAN 75' SEPARATION.

2) CONTRACTOR'S COST FOR TEMPORARY AND PERMANENT PAVEMENT REPAIR SHALL INCLUDE COST FOR PROVIDING MAINTENANCE AND PROTECTION OF TRAFFIC.

LONGITUDINAL UTILITY TRENCH PAVEMENT REPAIR

NOT TO SCALE

DRAWN BY:	MJB	CITY OF NEW BRITAIN DEPARTMENT OF PUBLIC WORKS STANDARD DETAIL
DATE:	10/10/2007	
APPROVED BY:	MEM	
DATE:	10/15/2007	

N:\Shared Documents\Public Works\Library\Standard Details\Details-ACAD\Section 3\det 3-18 long utility trench restoration.dwg

N:\Shared Documents\Public Works\Library\Standard Details\Details-ACAD\Section 4\det 4-1 project sign.dwg

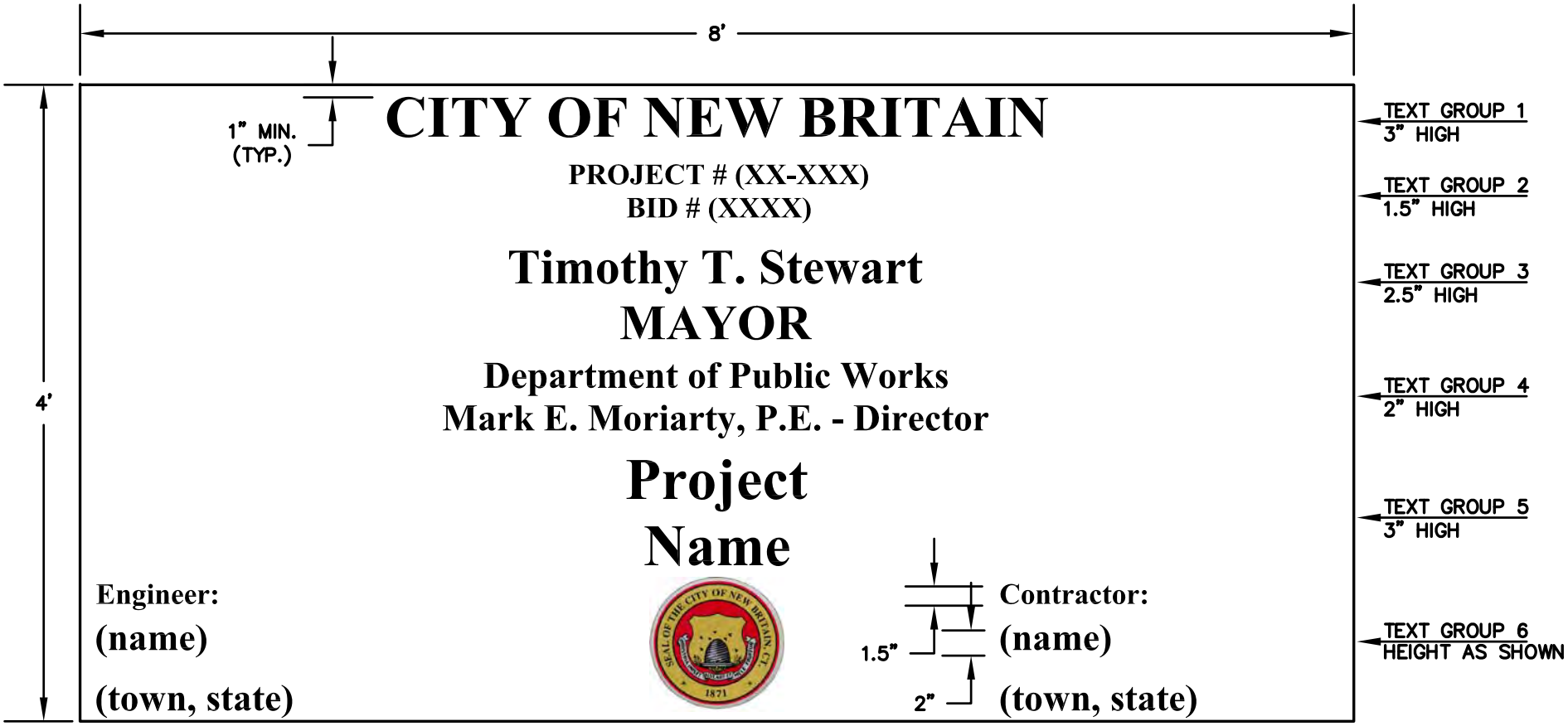

NOTES:
1) SIGN COLORS SHALL BE GOLD LETTERS ON A MAROON BACKGROUND (COLOR SAMPLES AND SEAL MAY BE OBTAINED FROM CITY ON REQUEST).
2) LETTERING FONT SHALL BE "TIMES NEW ROMAN" BOLDED.
3) VERTICAL SPACING OF LINES WITHIN EACH GROUP OF TEXT SHALL BE 50%-70% TEXT HEIGHT.
4) EACH GROUP OF TEXT (6) SHALL BE EVENLY SPACES (VERTICALLY), TO PROVIDE LAYOUT AS SHOWN.
5) SIGN SHALL BE MOUNTED ON SUITABLE SUPPORTS (2) OR ATTACHED TO EXISTING OBJECT, AS DIRECTED BY THE ENGINEER.

TYPICAL PROJECT SIGN
NOT TO SCALE

DRAWN BY:	MJB	CITY OF NEW BRITAIN DEPARTMENT OF PUBLIC WORKS STANDARD DETAIL
DATE:	10/22/2007	
APPROVED BY:	MEM	
DATE:	05/05/2008	

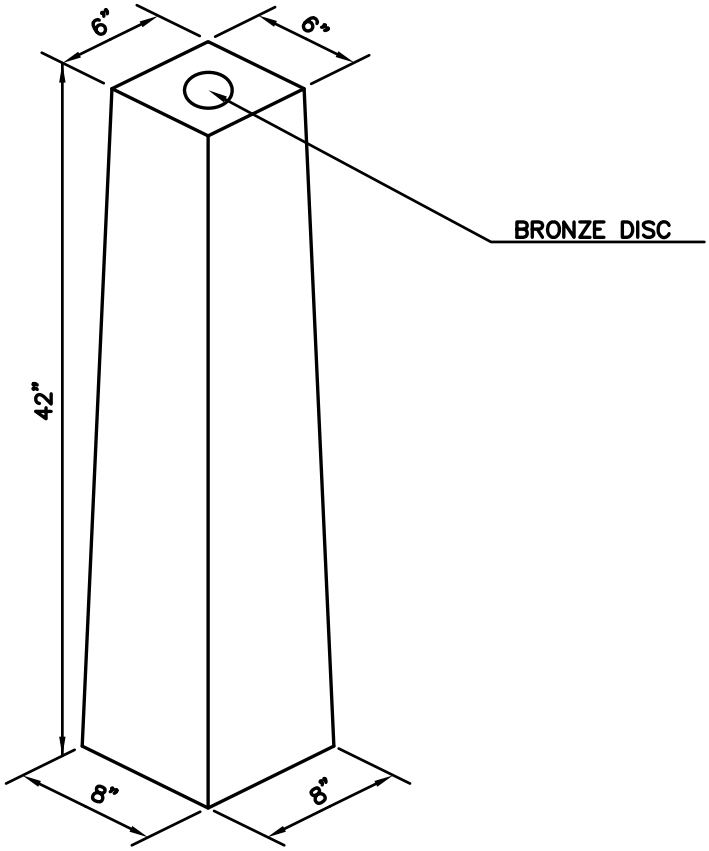

NOTES:

1) CONCRETE REINFORCED WITH 5–#5 BARS.

2) CITY OF NEW BRITAIN BRONZE DISC MUST BE PURCHASED FROM DPW FOR MANUFACTURING MONUMENTS.

NEW BRITAIN STANDARD CONCRETE MONUMENT

NOT TO SCALE

DRAWN BY:	MJB	CITY OF NEW BRITAIN DEPARTMENT OF PUBLIC WORKS STANDARD DETAIL
DATE:	12/06/2007	
APPROVED BY:	MEM	
DATE:	05/05/2008	

N:\Shared Documents\Public Works\Library\Standard Details\Details-ACAD\Section 4\det 4-2 monument detail.dwg

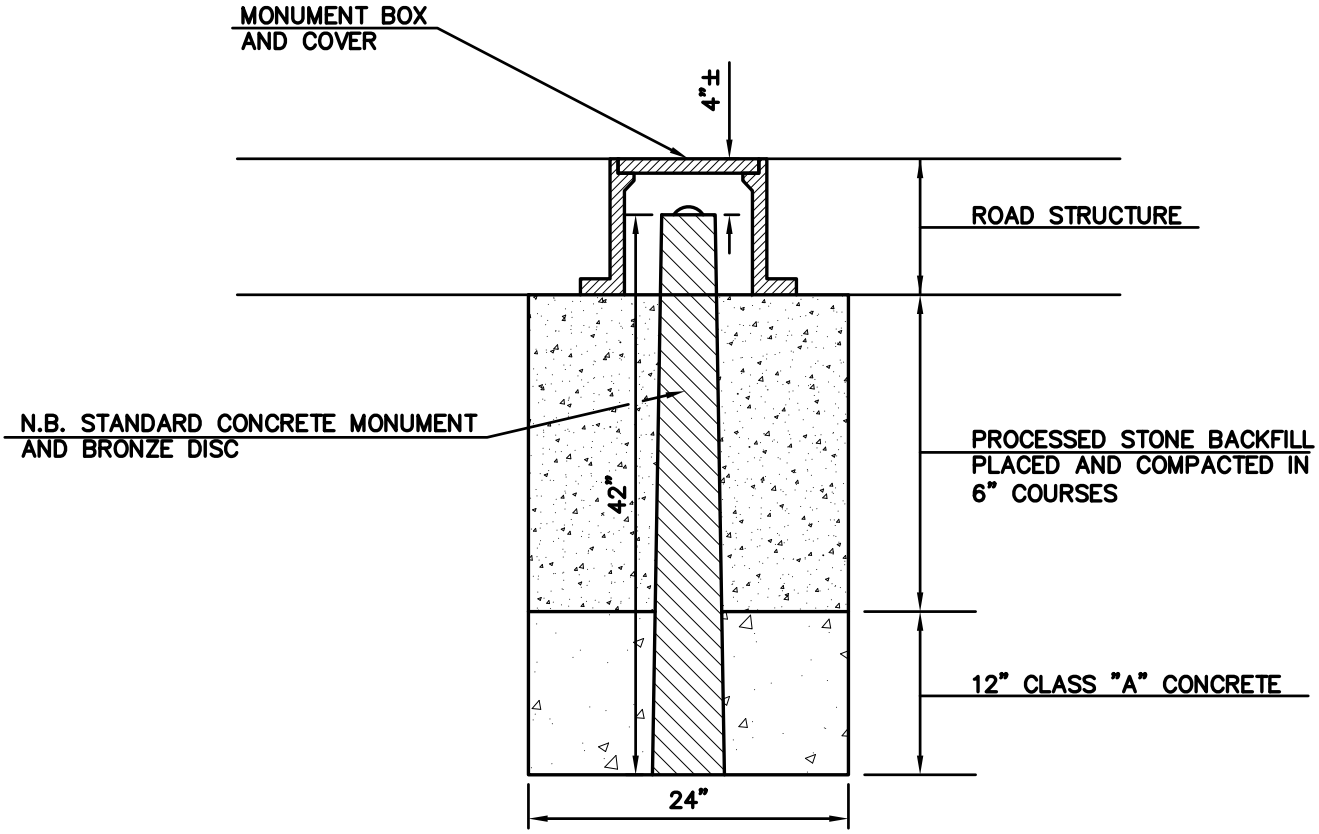

MONUMENT – PAVEMENT

NOT TO SCALE

DRAWN BY:	MJB
DATE:	03/14/2008
APPROVED BY:	MEM
DATE:	05/05/2008

CITY OF NEW BRITAIN
DEPARTMENT OF PUBLIC WORKS
STANDARD DETAIL

N:\Shared Documents\Public Works\Library\Standard Details\Details-ACAD\Section 4\det 4-3 monument pavement.dwg

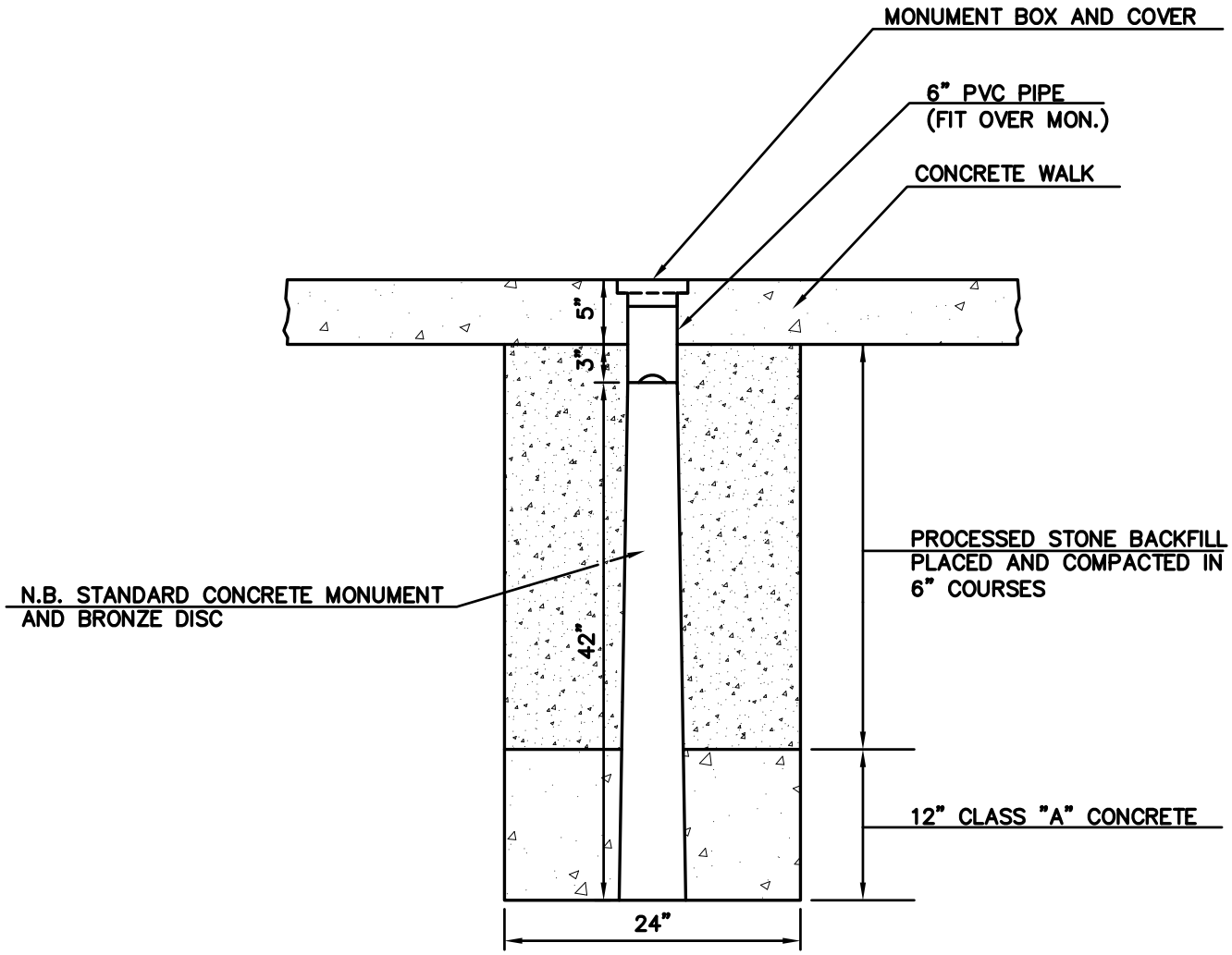

MONUMENT – SIDEWALK

NOT TO SCALE

DRAWN BY:	MJB	CITY OF NEW BRITAIN DEPARTMENT OF PUBLIC WORKS STANDARD DETAIL
DATE:	03/14/2008	
APPROVED BY:	MEM	
DATE:	05/05/2008	

N:\Shared Documents\Public Works\Library\Standard Details\Details-ACAD\Section 4\det 4-4 monument sidewalk.dwg

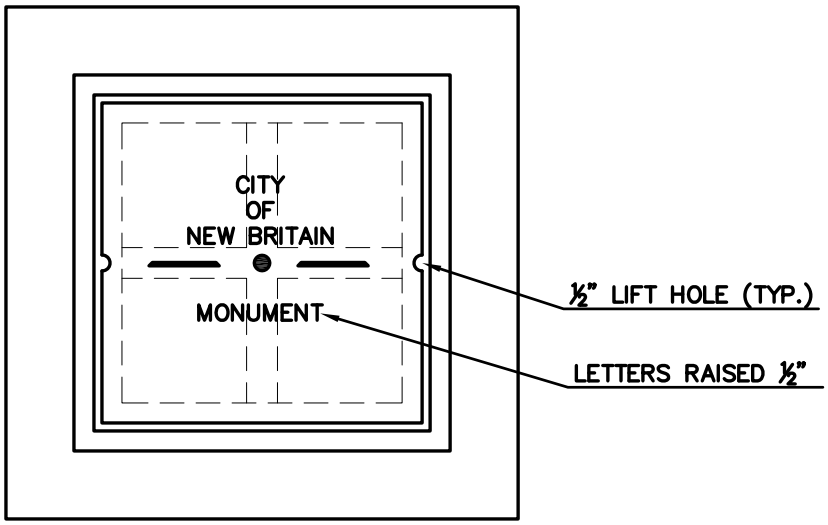

PLAN

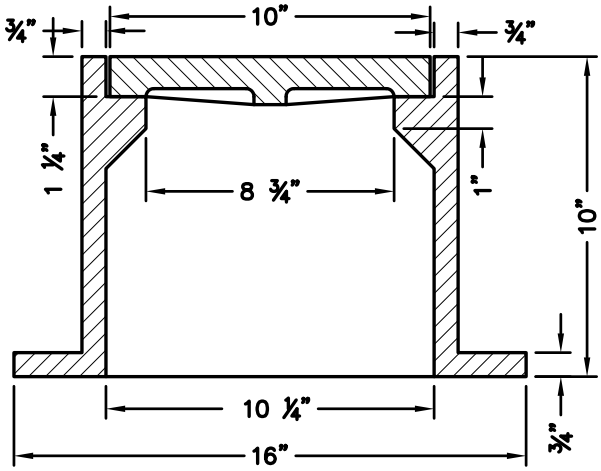

SECTION

MONUMENT CASTING – PAVEMENT

NOT TO SCALE

DRAWN BY:	MJB
DATE:	03/14/2008
APPROVED BY:	MEM
DATE:	05/05/2008

CITY OF NEW BRITAIN
DEPARTMENT OF PUBLIC WORKS
STANDARD DETAIL

N:\Shared Documents\Public Works\Library\Standard Details\Details-ACAD\Section 4\det 4-5 pavement casting.dwg

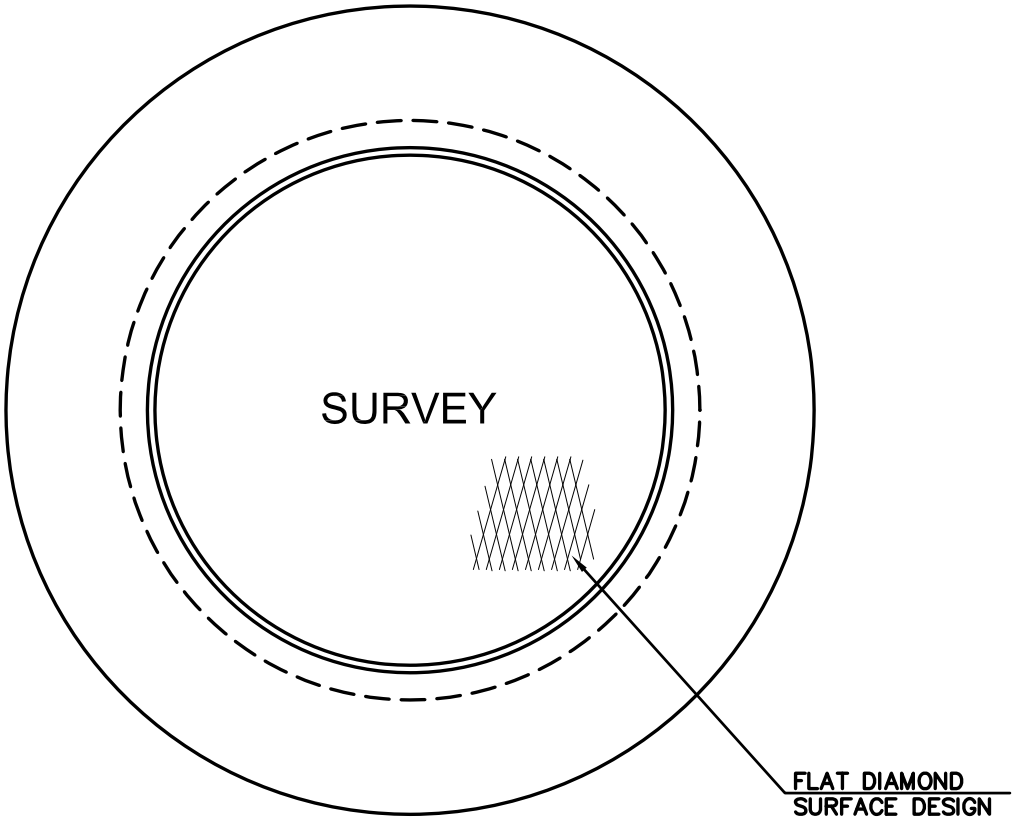

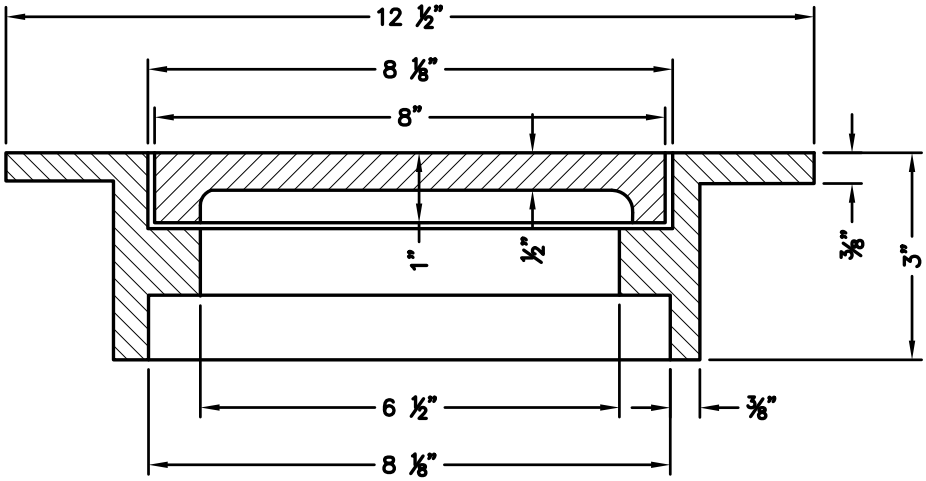

MONUMENT CASTING – SIDEWALK

NOT TO SCALE

DRAWN BY:	MJB	CITY OF NEW BRITAIN DEPARTMENT OF PUBLIC WORKS STANDARD DETAIL
DATE:	03/14/2008	
APPROVED BY:	MEM	
DATE:	05/05/2008	

N:\Shared Documents\Public Works\Library\Standard Details\Details-ACAD\Section 4\det 4-6 sidewalk casting.dwg

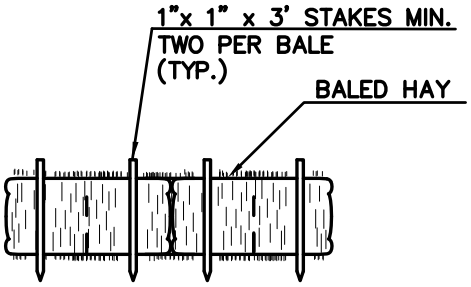

SECTION

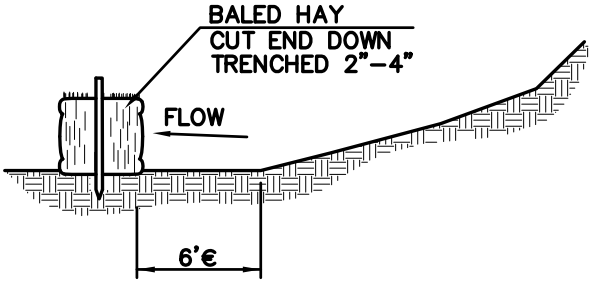

SECTION

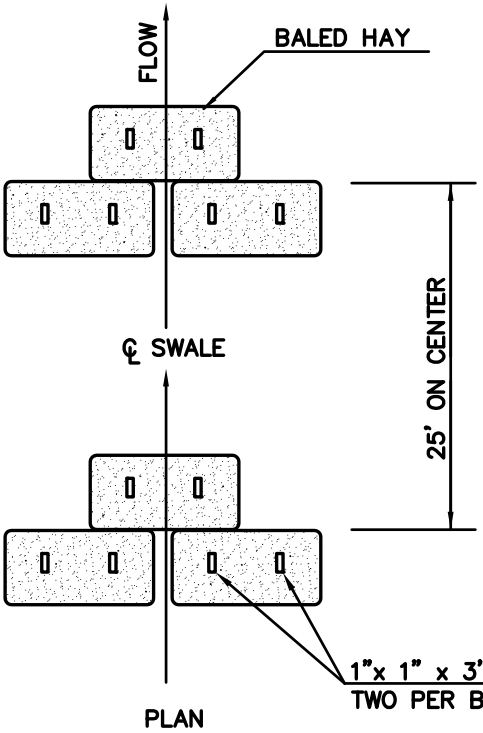

PLAN

SWALE LOCATION

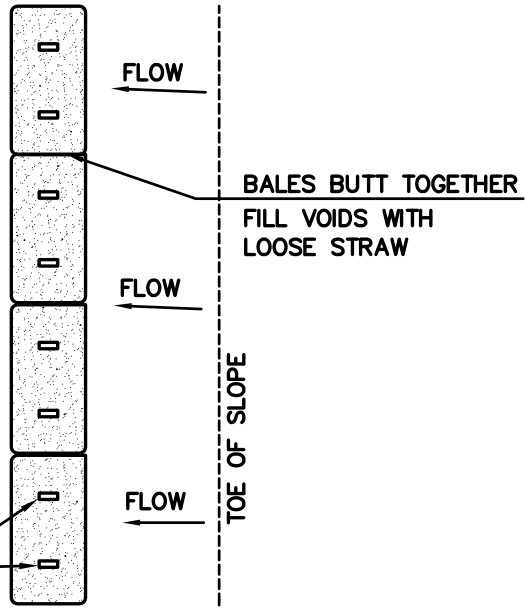

PLAN

TOE OF SLOPE LOCATION

TYPICAL SEDIMENTATION CONTROL BALE EROSION CHECKS

NOT TO SCALE

DRAWN BY:	MJB	CITY OF NEW BRITAIN DEPARTMENT OF PUBLIC WORKS STANDARD DETAIL
DATE:	12/07/2007	
APPROVED BY:	MEM	
DATE:	05/05/2008	

N:\Shared Documents\Public Works\Library\Standard Details\Details-ACAD\Section 4\det 4-7 erosion check bales.dwg

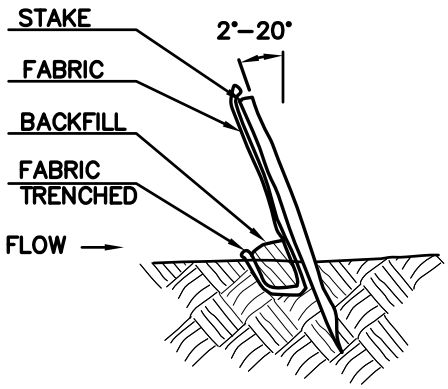

NOTES:

1) SEDIMENTATION FENCE SHOULD BE PLACED SO THAT IT LEANS TOWARD THE SOURCE OF SEDIMENT.

2) MAXIMUM SPACING FOR WOODEN STAKES IS 10.0'.

3) WOOD STAKES SHALL HAVE A MINIMUM CROSS–SECTION SIZE OF 1.5" X 1.5" AND A MINIMUM LENGTH OF 4 FT.

4) WOODEN STAKES SHALL BE DRIVEN TO A MINIMUM OF 1 FT. INTO THE GROUND.

5) 6" OF GEOTEXTILE SHALL BE BURIED BY TRENCHING AND AT LEAST 2.5 FT. IN HEIGHT OF GEOTEXTILE SHALL BE EXPOSED.

6) FABRIC SHALL BE JOINED ONLY AT A SUPPORT POST WITH A MINIMUM OF 6" OVERLAP AND SECURELY SEALED.

7) UPON RE–RESTABLISHMENT OF GROUND COVER IN DISTURBED AREAS AND WHEN DIRECTED BY THE ENGINEER, OR UPON FINAL INSPECTION, FENCE, AND ANY SEDIMENT SHALL BE REMOVED. AT NO TIME WILL THE FENCE REMAIN IN PLACE AFTER PROJECT COMPLETION, UNLESS OTHERWISE DIRECTED.

8) SEDIMENTATION FENCE SHALL NOT BE USED IN A WATER COURSE.

9) ONLY SEDIMENTATION FENCE FROM THE CTDOT APPROVED PRODUCT LIST SHALL BE USED.

10) CLEAN OUT ACCUMULATED SEDIMENT WHEN ONE–HALF (1/2) OF THE ORIGINAL HEIGHT OF THE SEDIMENTATION FENCE, AS INSTALLED, BECOMES FILLED WITH SEDIMENT OR AS DIRECTED BY THE ENGINEER. COST FOR THIS WORK SHALL BE INCLUDED IN THE PRICE OF THE SEDIMENTATION FENCE.

SEDIMENTATION CONTROL FENCE

NOT TO SCALE

DRAWN BY:	MJB	CITY OF NEW BRITAIN DEPARTMENT OF PUBLIC WORKS STANDARD DETAIL
DATE:	03/14/2008	
APPROVED BY:	MEM	
DATE:	05/05/2008	

N:\Shared Documents\Public Works\Library\Standard Details\Details–ACAD\Section 4\det 4–8 sed cntrol fence.dwg

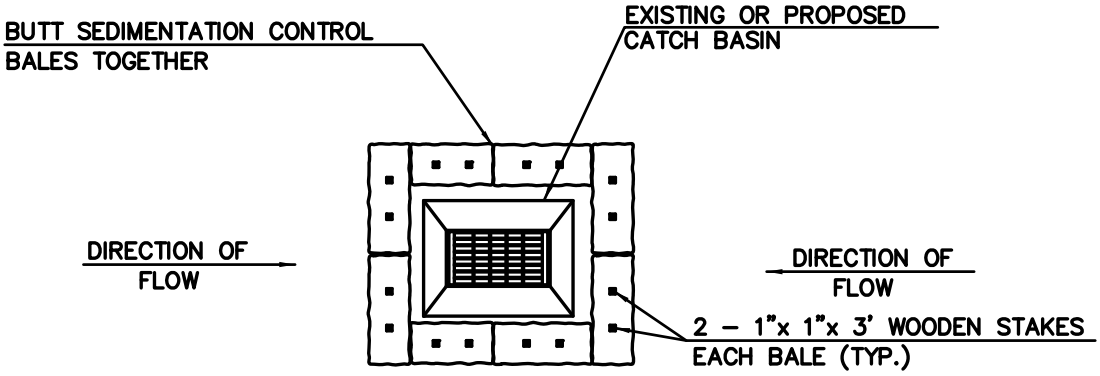

TYPICAL HAY BALE INSTALLATION
AT CATCH BASINS IN A DEPRESSION

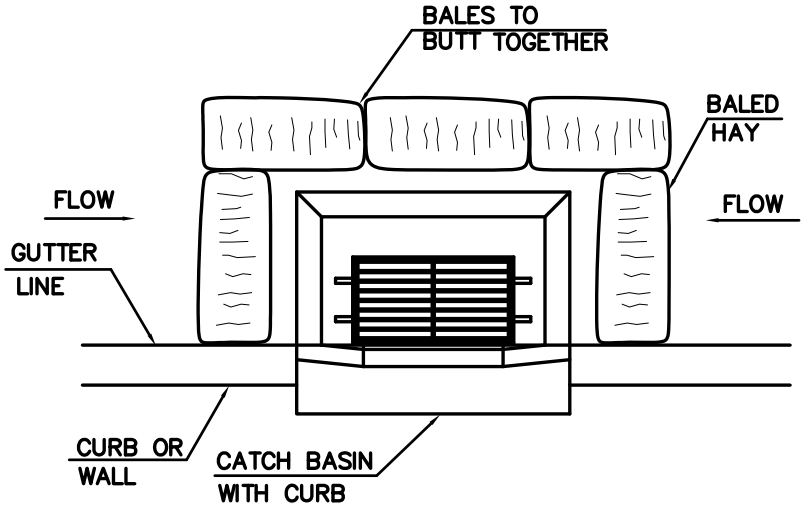

INLET PROTECTION FOR CATCH BASINS
AT CURBS & WALLS

TYPICAL SEDIMENTATION CONTROL BALE INLET PROTECTION
NOT TO SCALE

DRAWN BY:	MJB	CITY OF NEW BRITAIN DEPARTMENT OF PUBLIC WORKS STANDARD DETAIL
DATE:	12/07/2007	
APPROVED BY:	MEM	
DATE:	05/05/2008	

N:\Shared Documents\Public Works\Library\Standard Details\Details-ACAD\Section 4\det 4-9 cb inlet protection.dwg

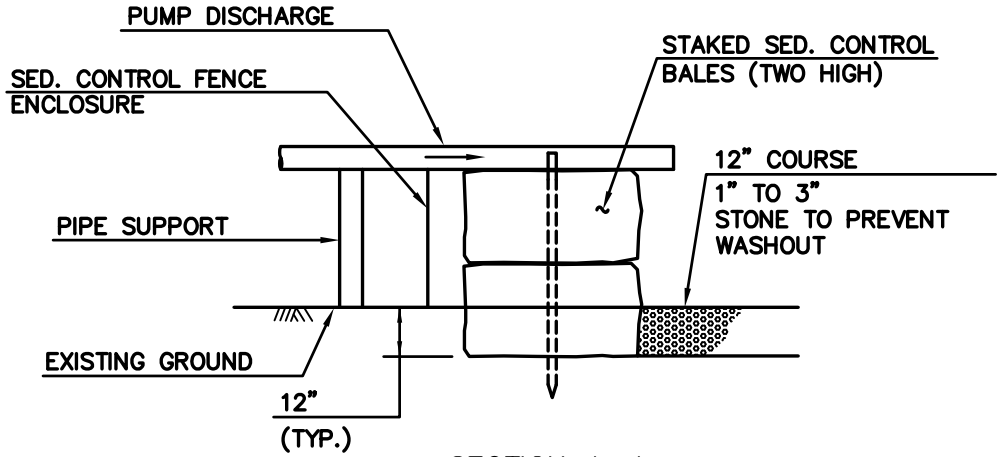

SECTION A–A

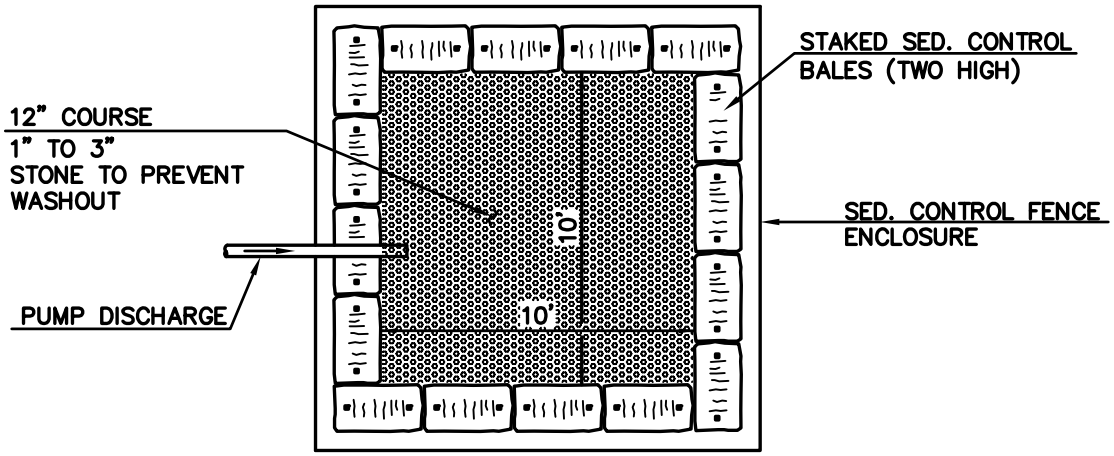

PLAN

NOTES
1) CONTRACTOR TO BRACE HAY BALES AS REQUIRED FOR STABILITY.
2) HEIGHT MAY VARY DEPENDENT UPON DE–WATERING RATE.
3) PUMP DISCHARGE AREA TO BE INCLUDED FOR PAYMENT UNDER ITEM "TRENCH EXCAVATION AND BACKFILL"

TEMPORARY PUMP DISCHARGE BASIN
NOT TO SCALE

DRAWN BY:	MJB
DATE:	03/27/2008
APPROVED BY:	MEM
DATE:	05/05/2008

CITY OF NEW BRITAIN
DEPARTMENT OF PUBLIC WORKS
STANDARD DETAIL

N:\Shared Documents\Public Works\Library\Standard Details\Details-ACAD\Section 4\det 4-10 pump discharge basin.dwg

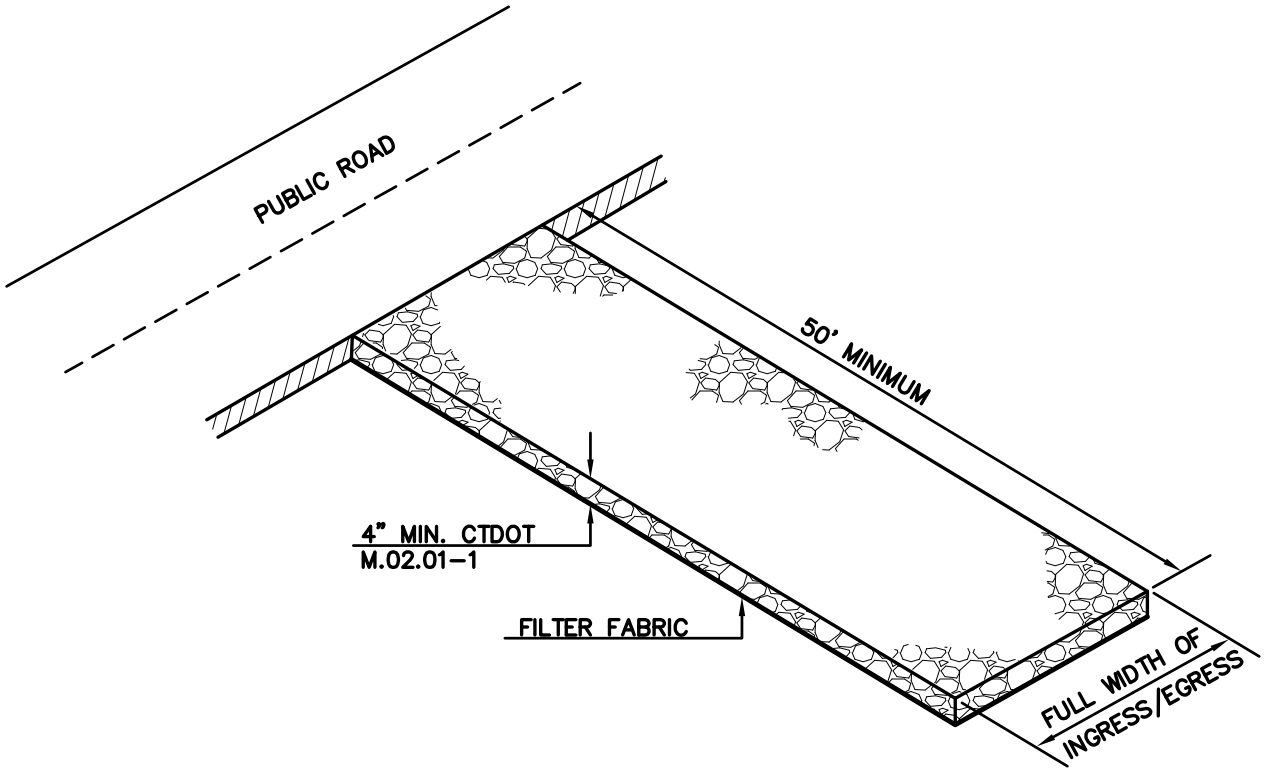

CONSTRUCTION ENTRANCE

NOT TO SCALE

DRAWN BY:	MJB
DATE:	12/10/2007
APPROVED BY:	MEM
DATE:	05/05/2008

CITY OF NEW BRITAIN
DEPARTMENT OF PUBLIC WORKS
STANDARD DETAIL

N:\Shared Documents\Public Works\Library\Standard Details\Details-ACAD\Section 4\det 4-11 construction entrance.dwg

N:\Shared Documents\Public Works\Library\Standard Details\Details-ACAD\Section 4\det 4-12 typ pavement markings.dwg

STOP BAR NOTES:

1) STOP BARS TO BE 12" MINIMUM UNLESS NOTED ON PLANS.
2) STOP BARS TO BE MARKED A MINIMUM OF 4' IN ADVANCE OF NEAREST EDGE OF CROSSWALK.
3) IN ABSENCE OF MARKED CROSSWALK, THE STOP BAR SHALL BE PLACED AT THE DESIRED STOPPING POINT.
4) THE STOP BAR SHALL ORDINARILY BE PLACED IN LINE WITH THE STOP SIGN. IF THE STOP SIGN CANNOT BE LOCATED EXACTLY WHERE THE VEHICLES ARE EXPECTED TO STOP, THEN THE STOP BAR SHOULD BE PLACED AT THE STOPPING POINT.
5) STOP BARS AND CENTERLINE (WHEN SIDE STREET WIDTHS ARE 16' OR MORE) ARE TO BE MARKED ON SIDE STREETS WITHIN THE LIMITS OF CONSTRUCTION, UNLESS OTHERWISE INDICATED OR DIRECTED.

CROSSWALK NOTES:

1) AT LOCATIONS WHERE THE CROSSWALK IS SKEWED, BARS ARE TO BE PARALLEL TO THE CENTERLINE AND ENDS OF BARS ARE TO BE PARALLEL.
2) BARS SHALL NORMALLY BE NO CLOSER THAN 2' FROM CURB LINE/EDGE OF ROAD. WHERE EXCESS SPACE MAY DEVELOPE, THIS DISTANCE MAY DECREASE TO 1'.
3) ONLY FULL LENGTH BARS ARE TO BE INSTALLED AT CORNERS.
4) 16" WIDE BARS ARE TO BE CENTERED ON YELLOW CENTERLINE, FOR 2' WIDE BARS, CENTER SPACE BETWEEN BARS ON YELLOW CENTERLINE.

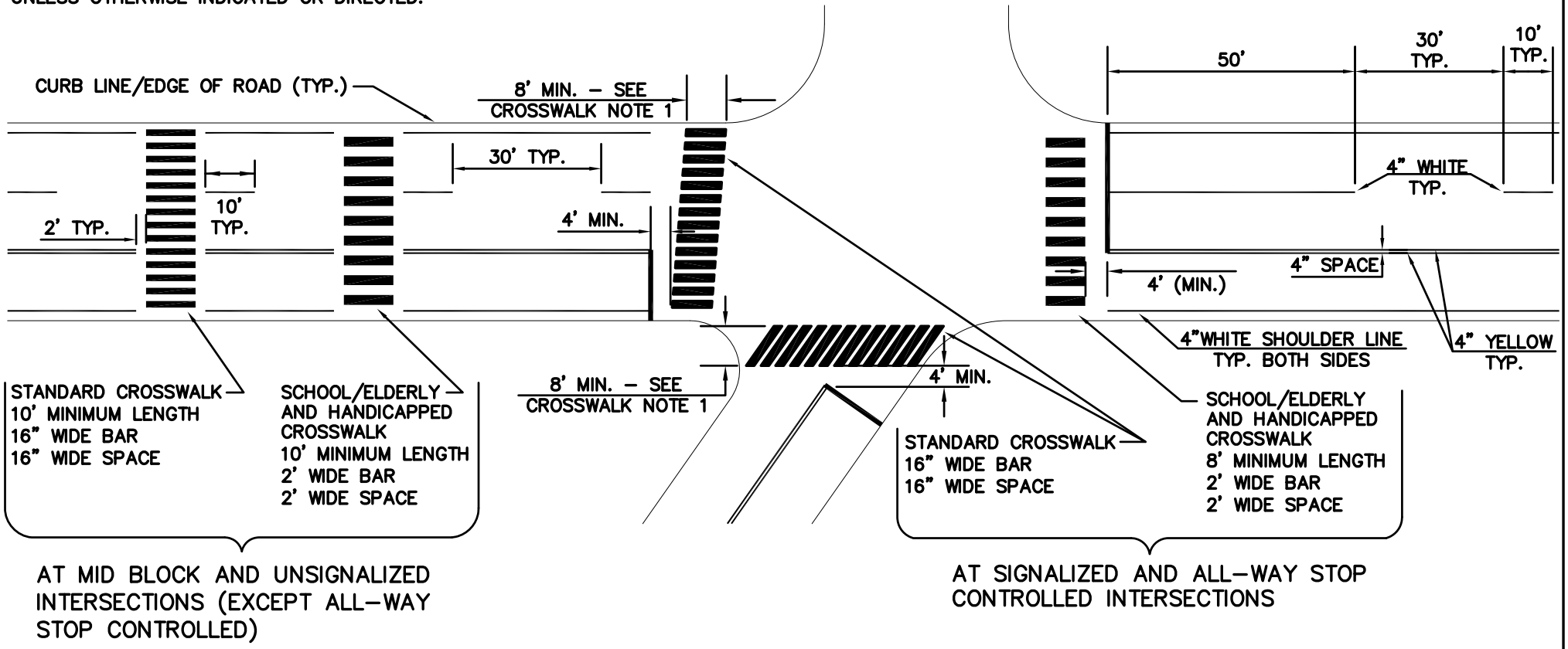

AT MID BLOCK AND UNSIGNALIZED INTERSECTIONS (EXCEPT ALL-WAY STOP CONTROLLED)

AT SIGNALIZED AND ALL-WAY STOP CONTROLLED INTERSECTIONS

TYPICAL PAVEMENT MARKINGS

NOT TO SCALE

DRAWN BY:	MJB
DATE:	03/27/2008
APPROVED BY:	MEM
DATE:	05/05/2008

CITY OF NEW BRITAIN
DEPARTMENT OF PUBLIC WORKS
STANDARD DETAIL

CITY OF NEW BRITAIN
STANDARD SPECIFICATIONS FOR MUNICIPAL CONSTRUCTION

ATTACHMENT "A"

STANDARD PAY ITEMS

SECTION	PAY ITEM	PAY UNIT
1.01	Mobilization	LS
1.02	Maintenance and Protection of Traffic	LS
1.03	Trafficperson	EST
1.04	Sweeping for Dust Control	HR
1.05	Calcium Chloride for Dust Control	TON
1.06	Water for Dust Control	MGAL
1.07	Water Pollution Control	EST
	Temporary Slope Protection	SY
1.08	Sedimentation Control Bales	LF
	Sedimentation Control Fence	LF
1.09	Construction Staking	LS
1.10	Restoration	LS
1.11	Project Sign	EA
2.01	Clearing and Grubbing	LS
2.02	Rock Excavation (No Explosives)	CY
	Earth Excavation	CY
	Rock Excavation	CY
	Unclassified Excavation	CY
	Channel Excavation - Earth	CY
	Channel Excavation - Rock	CY
	Cut Concrete Pavement	LF
	Cut Bituminous Concrete Pavement	LF
	Removal of Concrete Pavement	SY
	Unsuitable Material Excavation	CY
2.03	Trench Excavation (0 - 12’ deep)	CY
	Trench Excavation (0 - over 12’ deep)	CY
2.04	Rock in Trench Excavation	CY
2.05	Test Pits	CY
2.06	Ditch Excavation	CY
	Rock in Ditch Excavation	CY
2.07	Borrow	CY
	Selected Borrow	CY

SECTION	PAY ITEM	PAY UNIT
2.08	Formation of Subgrade	SY
2.09	Subbase	CY
2.10	Processed Aggregate Base	CY
2.11	Processed Stone	CY
2.12	Granular Fill	CY
2.13	Bedding Material for Rigid Pipe	CY
	Bedding Material for Flexible Pipe	CY
2.14	Temporary Sheet Piling	SF
	Sheet Piling Material Left in Place	SF
3.01	(Sanitary or Storm) Manhole Type I	EA
	(Sanitary or Storm) Manhole Type I Modified	EA
	(Sanitary or Storm) Manhole Type II	EA
	(Sanitary or Storm) Manhole Type II Modified	EA
	(Sanitary or Storm) Manhole Type III	EA
	Reset Manhole	EA
3.02	Type (C or C-L) Catch Basin	EA
	Type (C or C-L) Catch Basin over 10’ deep	EA
	Type (C or C-L) Double Catch Basin Type I	EA
	Type (C or C-L) Double Catch Basin Type I over 10’ deep	EA
	Type (C or C-L) Double Catch Basin Type II	EA
	Type (C or C-L) Double Catch Basin Type II over 10’ deep	EA
	Yard Drain	EA
	Offset Catch Basin Type A	EA
	Reset Catch Basin	EA
3.03	(size) Reinforced Concrete Pipe - (sanitary or storm)	LF
	(size) Polyvinyl Chloride Pipe - (sanitary or storm)	LF
	(size) Ductile Iron Pipe - (sanitary or storm)	LF
3.04	(size) (type) (sanitary or storm) Sewer Connection	LF
	(sanitary or storm) Chimney	VLF
	(sanitary of storm) Clean-out	EA
3.05	(size) (type) Underdrain	LF
	(size) (type) Edgedrain	LF
3.06	Sewage Flow Bypass Pumping	LS

SECTION	PAY ITEM	PAY UNIT
3.07	Pipeline Cleaning And Video Inspection	LF
3.09	(size) Sewer Line Pressure Testing and Sealing (joint spacing)	LF
	Lateral Line Pressure Testing and Sealing	EA
3.10	Chemical Root Control	LF
	Chemical Root Control for Manholes	EA
3.11	Abandoning Sewer Or Utility Structure	EA
3.12	Abandoning Pipe and Conduits	CY
3.13	Clean Existing Catch Basin	EA
	Clean Existing Manhole	EA
	Clean Existing Culvert (6” to 42”)	LF
	Clean Existing Culvert (Greater than 42”)	LF
4.01	(class) Concrete	CY
4.02	Deformed Steel Bars	LB
	Deformed Steel Bars – Epoxy Coated	LB
	Welded Wire Fabric	SY
4.03	Concrete Curbing	LF
	Concrete Sidewalk	SF
	Concrete Driveway Ramp	SF
4.04	Granite Curbing – Straight	LF
	Granite Curbing – Curved	LF
4.05	Removal of Existing Masonry	CY
5.01	Bituminous Concrete (class)	TON
	Material for Tack Coat	GAL
5.02	Standard Temporary Pavement Repair	SY
	Standard Permanent Pavement Repair	SY
5.03	Longitudinal Temporary Pavement Repair	SY
	Longitudinal Permanent Pavement Repair	SY
5.04	Bituminous Concrete Lip Curbing	LF
	Bituminous Concrete Park Curbing	LF
5.05	Bituminous Concrete Sidewalk	SY
	Bituminous Concrete Driveway	SY
	Bituminous Concrete Driveway – Commercial	SY

SECTION	PAY ITEM	PAY UNIT
5.06	Milling of Bituminous Concrete	SY
5.07	Infrared Pavement Restoration	SY
5.08	Painted Legend, Arrows and Markings	SF
	Painted Pavement Markings (width) (color)	LF
	Hot-Applied Painted Pavement Markings (width) (color)	LF
	Epoxy Resin Pavement Markings (width) (color)	LF
	Epoxy Resin Pavement Markings, Symbols and Legend	SF
	Removal of Pavement Markings	SF
6.01	Furnishing and Placing Topsoil	SY
6.02	(caliper) (deciduous tree name)	EA
	(height) (evergreen tree name)	EA
	(size) (shrub name)	EA
	(size) (broad-leaved evergreen name)	EA
	Vines (name)	EA
	Groundcover (name)	EA
	Wood Chip Mulch	SY
	Gravel Mulch	SY
6.03	Turf Establishment	SY
	Erosion Control Matting	SY
6.04	Sodding	SY
7.01	Survey Monument	EA
	Survey Monument Disc	EA
7.02	Iron Pin Replacement	EA

ATTACHMENT "B"

NOTICES TO CONTRACTORS

(Required for Municipal Capital Projects)

NOTICE TO CONTRACTOR – PROJECT DESCRIPTION

Provide project description narrative including:

- *General description*
- *Any permitting limitations that would affect project*
- *Special events that need to be coordinated with project construction (i.e. festivals, parades, etc.)*
- *Business owner issues*
- *Weekly progress meetings or monthly public information meetings*
- *Critical emergency requirements*
- *Other project specific issues*

NOTICE TO CONTRACTOR – LIST OF CITY OF NEW BRITAIN CONTACTS

(Note: contacts listed are current as of May, 2008 - must be verified)

Director of Public Works.....Mark E. Moriarty .....(860) 826-3350

City Engineer .....Patricia E. Kirkwood..(860) 826-3350

City Surveyor.....Patrick Toscano.....(860) 826-3350

City Planner .....Steve Schiller .....(860) 826-3432

Director of Building Department.....Frank M. Wiatr.....(860) 826-3390

Director of Water Department .....Gilbert J. Bligh.....(860) 826-3535

Fire Chief .....Mark Carr.....(860) 826-3000

Chief of Police .....William L. Gagliardi..(860) 826-3000

New Britain Emergency Medical Services.....(860) 826-3000

NOTICE TO CONTRACTOR – FIRE DEPARTMENT, POLICE & EMERGENCY MEDICAL SERVICES

The Contractor shall contact the Fire Department, Police and Emergency Medical Services, prior to work and establish coordination necessary as to disruption of services during construction.

NOTICE TO CONTRACTOR – SAFEGUARDING OF RESIDENCES AND PEDESTRIANS

The Contractor shall maintain and protect traffic operations at all driveways and provide adequate sightline. The Contractor shall not restrict sightline with construction equipment when not actively working. The Contractor shall provide and maintain safe pedestrian operation on existing sidewalk or temporary bituminous walks at all times during and after construction hours. The Contractor shall provide adequate protection (temporary 6' high chain link fence) between work area and pedestrian sidewalk activities as directed by the Engineer. Replacement of temporary protective chain link fence due to damage by the Contractor's operation or rendered inoperative by any cause, will not be measured for payment.

NOTICE TO CONTRACTOR – CITY OF NEW BRITAIN DISCLAIMER

The City of New Britain bidding and other information and documents which are obtained through the Internet, World Wide Web Sites or other sources are not to be construed to be official information for the purposes of bidding or conducting other business with the City.

It is the responsibility of each bidder and all other interested parties to obtain all bidding related information and documents from official sources within the City.

Persons and/or entities which reproduce and/or make such information available by any means are not authorized by the City to do so and may be liable for claims resulting from the dissemination of unofficial, incomplete and/or inaccurate information.

NOTICE TO CONTRACTOR – SALVAGEABLE MATERIALS

The Contractor shall salvage the following materials:

ITEMS	DESTINATIONS
To be coordinated during project design	Department of Public Works 55 Harvard Street New Britain, CT Tel. (860) 828-3480

The materials to be salvaged shall be delivered by the Contractor to the destination indicated above between the hours of 8:00 a.m. and 3:30 p.m. Monday through Friday, holidays excluded, after the proper notification has been made to the above Authorities.

All salvageable material shall be loaded, transported and unloaded by the Contractor.

The Contractor shall not receive payment for this work. The costs for loading, transporting and unloading of salvageable materials shall be included in the overall cost of this project.

NOTICE TO CONTRACTOR – SIGN INVENTORY

Prior to the commencement of construction, the Contractor and the Engineer shall conduct a joint inventory of signs, delineators and object markers. Signs, delineators or object markers that are knocked down or destroyed by the Contractor during the construction of the project shall be replaced by the Contractor at no cost to the City.

NOTICE TO CONTRACTOR – NOISE POLLUTION

The Contractor shall take measures to control the noise intensity caused by his construction operations and equipment, including but not limited to equipment used for drilling, pile driving, blasting, excavation or hauling.

All methods and devices employed to minimize noise shall be subject to the continuing approval of the Engineer and in accordance with the City of New Britain Ordinance Article V. Noise, Sec. 16-103-(16) & (17), Sec. 16-104-(7) (9) & (10). The maximum allowable level of noise at the nearest residence or occupied building shall be 90 decibels on the “A” weighted scale (dBA). Any operation that exceeds this standard will cease until a different construction methodology is developed to allow work to proceed within the 90 dBA limit.

NOTICE TO CONTRACTOR – GENERAL

1. Notification of Anticipated Start Date

The Contractor shall notify the City of New Britain inspector assigned to the project, or if the Contractor is not aware of an inspector being assigned, the City Engineer, at 826-3350, a minimum of five (5) working days prior to commencing work on the project.

2. City Requirements Not Waived

Failure to include any specification requirement of the City of New Britain from the Contract Documents shall not be construed as reason to waive or eliminate the requirement from applying to work performed under this contract.

3. Record of Preconstruction Conditions

The Contractor shall furnish to the Engineer photographs and videos of the Project Site and immediate surrounding areas as specified below:

A. PHOTOGRAPHS

1. Prior to the start of construction the Contractor, together with the City Inspector, shall digitally photograph the project to document existing conditions, special care items and critical areas. Special attention should be paid to areas where construction is anticipated on private property, areas along the entire Project Site boundary, and any features (e.g. walls, fences, structures, driveways, landscaping, trees, poles, architectural features, etc.) near or within the Project Site which will or may be affected by Project activities. The photographs should be taken from various locations and perspectives throughout the project area so as to provide a maximum coverage of the area.

2. After the completion of the project the Contractor, together with the City Inspector, shall digitally photograph the project to show completed work. The photographs should be taken from approximately the same locations and perspectives as those taken prior to construction.

B. VIDEOS

1. A narrated digital video of the Project Site and its immediate surrounding areas shall be taken prior to construction, with the date, time and locations clearly defined in the film. This video shall also be taken in the presence of the City Inspector. Special attention should be paid to areas where construction is anticipated on private property, areas along the entire Project Site boundary, and any features (e.g. walls, fences, structures, driveways, landscaping, trees, poles, architectural features, etc.) near or within the Project Site which will or may be affected by Project activities.

2. A narrated digital video of the Project Site and its immediate surrounding areas taken after construction, with the date, time and locations clearly defined in the film. The videos content (locations, perspective, sequence, etc.) should essentially replicate that of the pre-construction video.

Pre-construction project photograph and video files shall be delivered to the Engineer prior to commencing any construction; and the post-construction project photograph and video files shall be delivered to the City with the final payment requisition. The photographer(s) should consult with the Project Inspector prior to shooting regarding any particular locations, perspectives, and/or features the Project Inspector may wish to have recorded.

4. Project Surveyor

Prior to commencement of any Project construction, the Contractor shall submit to the Engineer the name, place of professional employment, business address and phone number, and license number of a licensed land surveyor in the State of Connecticut whose services have been retained by the Contractor to serve as Project Surveyor. The duties and responsibilities of the Project Surveyor shall include construction layout (Article 8 of the Supplemental General Conditions [SGC]), locating and verifying all existing survey and property monuments and markers prior to commencement of construction, establishment or re-establishment of survey and property monuments and markers, and data gathering for and preparation of record drawings (e.g. As-built drawings).

The Project Surveyor shall perform or **directly** supervise the performance of all such duties and responsibilities; and the Engineer has the authority to verify such supervision and to halt construction for reason of lack of property supervision if the level of such supervision is not satisfactory.

Prior to Final Acceptance of any portion of the project, As-built drawings of that portion of the project, prepared at the Contractor's expense by the Project Surveyor in accordance with the latest revision of the City of New Britain Requirements for As-built Maps, must be submitted to, and approved by, the Engineer. As-built data is to be clearly and legibly recorded, under the supervision of the Project Surveyor, as the work progresses. As-built data for any, or all, completed work must be made available to the Engineer for review upon demand.

The designated Project Surveyor may not be changed without valid cause and written approval from the Engineer. In order to change the designated Project Surveyor, the Contractor must submit, in writing, to the Engineer, the reason for the desired change, along with all pertinent information required regarding the proposed replacement Project Surveyor. The Engineer retains the right to contact and obtain information from the Project Surveyor regarding his functioning in such capacity on the Project and the Contractor's proposal to relieve him of such duties.

5. Existing Laterals Conveying Improper Flow

During construction, should the Contractor find an existing house sanitary lateral that is running with clear/clean water or a storm water lateral that is running with sewage, he shall notify the New Britain department of Public Works to dye test said lateral prior to his reconnection to the new sanitary sewer/or storm water sewer to eliminate any cross connections from the sanitary sewage system or the storm water system.

6. New Sewer and Storm Mains to be Video Inspected

The City of New Britain requires that all sanitary and storm water sewer main installations be video inspected in the presence of the inspector before the final acceptance of work. The final video shall remain the property of the City. Live sanitary sewers require testing and sealing of all joints and vacuum testing of sanitary manholes before acceptance by the City.

7. Selected Water Department Policies and Requirements

A) Each Prospective Bidder shall make provisions in his bid to account for all fees that must be paid to the New Britain Water Department. These fees would include costs of all water main tapping, opening and closing water valves, repacking leaking joints, and any and all other service work that the New Britain Water Department shall perform for the Contractor. Fee schedules for the Water Department may be obtained by calling 826-3538.

B) If water mains are anticipated to be relocated or crossed during the prosecution of Project Work, the Contractor is responsible to, prior to commencing construction, obtain from the Water Department and field verify the locations of all existing water valves and provide access to the same. Unless otherwise permitted, existing valves shall not be operated by the Contractor. Whenever the operation of a valve is necessary, the Contractor shall make arrangements, at least 48 hours in advance of the need, to have Water Department personnel perform the required operations.

C) A minimum of 20 percent of water main pipe supplied per load is to be gauged by the manufacturer. Gauge reports are to be submitted to the Project Inspector.

D) The Contractor shall provide all necessary pipe fittings and hardware for connections to existing water mains, fire services, and water services. The method of connection and proposed materials shall be approved in advance by the Water Department. The costs for such fittings and hardware shall be appropriately included in the various items of water facility related work.

E) The contractor shall provide the New Britain Water Department with a disinfection sequence schedule prior to commencing construction.

F) The New Britain Water Department shall perform all wet taps and service taps, and the opening and closing of mains at the contractor's expense. These costs shall be appropriately included in the various items of water facility related work.

G) All existing water services shall be connected to the newly constructed main in accordance with City standards. Existing sizes will be maintained.

H) Temporary water services, as may be required for the Project, shall be tapped from operating mains (see F above); and in no instance shall connections to fire hydrants for this purpose be performed or allowed, as harmful bacteria may be present within the hydrant.

I) The cost of trenching and backfilling for the water service connections shall be included in the bid item A Water Service Connections.

J) Contractors use of hydrants to fill tank trucks, rollers, vac-alls, street sweepers, etc. must comply with the following:

1) In order to comply with the State Law (DEP regulation Section 22a-66-3j) the potential contamination of water supplies from hoses or other equipment, no filling of tank trucks etc., shall be allowed from public water supply reservoirs and their tributaries.

2) In the filling of tank trucks, etc., from the distribution system (hydrants, etc.) there is a danger of contaminated water being siphoned back into the water supply lines. The use of hydrants, etc. shall be only by permit and at points approved by the New Britain Water Department, with the Contractor's equipment being equipped with a back flow preventor valve and an air gap device. See attached detail of an approved air gap device.

K) Before any hydrant is used, the operator will strictly adhere to the following rules and regulations as set forth by the Board of Water Commissioners governing the proper use of a Fire hydrant.

1. Operator will refer to map and choose one of the hydrants indicated. The Contractor will obtain a copy of the map from the New Britain Water Department.

2. Before using hydrant, operator will call 826-3536 and inform the Water Department of the location of the hydrant to be used. (After hour calls will be answered by our filtration plant).

3. After approval is given, the operator will use the hydrant in the exact order as follows:

A. Remove nozzle cap and attach a guard valve with:

1. 2-2" hose to wash street

2. RPD device when flushing sewers, filling sweepers, filling Vac-All, filling water wagon, rodding. (Note: An approved air gap is an acceptable alternative to the above).

4. With guard valve closed, open hydrant slowly all the way.

5. Regulate flow through guard valve.

6. When job is done, close guard valve.

7. Close hydrant slowly. Then open guard valve to insure hydrant is shut down. If it is, remove guard valve, check to make sure hydrant barrel has drained, and

replace cap securely. Call Water Department and inform them you are finished using hydrant.

If not able to shut hydrant down, do not force hydrant closed. Leave everything in place and call the Water Department and report the location of the hydrant and the problem.

Under no circumstances are Cory hydrants to be used. Do not use pipe wrenches to open and close hydrant. If when you are opening the hydrant you feel a chatter, shut down slowly immediately and notify Water Department. In any event, call the Water Department anytime you have a problem or are in doubt of what you are doing.

NOTICE TO CONTRACTOR – LIST AND CONTACTS OF UTILITY PERSONNEL

(Note: contacts listed are current as of May, 2008 - must be verified)

Prior to the commencement of construction, the Contractor shall contact, coordinate and maintain close liaison with the following Utility Companies:

AT&T	Frank Bertuca	(203) 238-5657
Comcast Cable Co.	David Herzog	(860) 613-3066
Connecticut Natural Gas Corp.	Vasant Patel	(860) 727-3114
New Britain Dept. of Public Works	Mark Moriarty	(860) 826-3350
New Britain Water Department	Gilbert Bligh	(860) 826-3535
Northeast Utilities / CL&P	Stephen Klubnik	(860) 665-2473

NOTICE TO CONTRACTOR – PROTECTION OF UNDERGROUND UTILITIES

The Contractor is hereby instructed to follow established "Call Before You Dig" procedures.

The Contractor is hereby advised that placement of heavy equipment and materials or the traversing of heavy construction equipment over underground utilities which might damage utility shall be reviewed and approved by the Engineer.

The Contractor shall consider in his bid any inconvenience and work required for this condition. The work to repair or replace any damage caused by the Contractor's operations will be made solely at the Contractor's expense.

NOTICE TO CONTRACTOR - UTILITY COORDINATION

In addition to the requirements of the Supplemental General Conditions Section 15, Existing Underground Utilities, Protection, and Responsibility, the Contractor is advised of the following Utility coordination items.

The Contractor will be responsible for the protection and support of utilities within the project limits. The Contractor is responsible for the design, method and manner of installations of temporary supports, if needed. The design for temporary supports must be submitted to the Engineer for review and approval.

The Contractor is hereby advised that upon issuance of the notice to proceed, the Contractor shall immediately coordinate the installation of all utilities, and develop a schedule for construction that accommodates each utility installation without negatively impacting the overall project schedule. Items specific for the project utility companies include:

- *LIST UTILITY COMPANIES INVOLVED IN PROJECT AND DESCRIBE WORK BEING PERFORMED BY EACH.*

The Contractor shall install all proposed utilities while maintaining existing utility services live at all times. In addition the Contractor shall stake out the proposed construction survey base line and provide bench marks for any utility company requiring this service for their use in relocation of their facility. The cost of this service shall be included in the bid item for "Construction Staking".

ALL UTILITIES

The Contractor shall coordinate construction activities with the utility companies and develop a construction schedule accordingly. The contractor is advised that his operations and road construction work may be significantly impacted until the utility companies have completed their proposed utility work. The Contractor should note that he will be required to reset casting of any utility work constructed and completed by others prior to the Contractor performing his work at any location within the project limits to final grade.

CITY OF NEW BRITAIN
STANDARD SPECIFICATIONS FOR MUNICIPAL CONSTRUCTION

ATTACHMENT "C"

SITE PLAN APPLICATION CHECKLIST

City of New Britain

"New Britain: A City for All People"

27 West Main Street **New Britain, CT 06051**

The City's Site Plan review procedure is intended for a proposed development to secure compliance with the City of New Britain requirements and standards as well as general accepted design practice for site improvements. Work proposed on Site Plan submittals shall reflect the City's requirements and standards listed in:

1. City of New Britain, Zoning Ordinances
2. City of New Britain Engineering Standards, dated September 30, 2000
3. City of New Britain, Standard Specifications for Municipal Development, dated September 1993

Site Plans are required to be submitted to the City for approval for all commercial and residential developments including site improvements involving ¼ acre or more of impact or work within the Public right-of-way. Site Plan approvals must be granted by the City prior to any construction taking place on that site. Applicants are encouraged to schedule a pre-application meeting with Staff to discuss specifics about their site and specific items the City will look to be addressed. Applicants should contact Pamela Ryglisyn in the City's Public Works Department at (860) 826-3372 if you wish to schedule a pre-application meeting.

The following requirements are considered minimums. The applicant has the responsibility for furnishing sufficient information in appropriate clarity and detail to allow determination of conformance with the City's Ordinances, policies, specifications, and other standards and requirements. Upon request, the applicant shall also furnish any additional information requested by the City for its review. In general Site Plan submittals shall address the following requirements:

SITE PLAN APPLICATION CHECK LIST

Site Location:

Submittal Designation:
(e.g. 'Original', '3rd Revision', '1st Amendment' [post approval])

Plan/Revision Date:

Land Survey Requirements			
Y	***N***	***NA***	
			A separate survey plan signed and stamped by the Land Surveyor
			Topographic and Boundary surveys performed by a registered CT Land Surveyor to level A-2, T-2 or appropriate accuracy performed within one year of the site plan submittal.
			Inland wetlands and watercourses must be delineated by a DEP Certified Soil Scientist and shown on the plans.

			Address of property and name of owner of record .
			Existing contours shown at 1’ intervals with spot elevations where appropriate.
			Existing spot elevations shall be given at back of walk/street line at property corners and center of existing/proposed driveway aprons.
			Location of all existing buildings
			Locations and types of site features such as: abutting roads, sidewalks, curbing, driveways, parking spaces, landscaping, fencing, dumpsters, water bodies, retaining walls, etc…
			Name, type, and size of on-site and off-site drainage and utilities
			Where applicable, show FEMA 100-Year Flood line. An elevation certificate must accompany any application for building or filling in a flood zone.
Site Plan Requirements (General)			
Y	***N***	***NA***	
			Appropriate sheet size (24”x 36” or 18” x 24”), appropriate graphic scale (1” = 10’, 1”=20’, 1”=30’ or 1”=40’), north arrow, dates of plan preparation and revisions.
			Name of persons(s) or firm(s) preparing the Plans along with contact information.
			Name and address(es) of the applicant.
			Street address of site [assigned by Public Works.]
			Plan sets of more than three sheets must have a cover sheet with the project name, address of site, and the name and contact information for the developer and the site designer, and a sheet index.
			For larger or complex sites, separate plan sheets shall be required for site survey, site demolition, site layout and improvements, site grading, and site drainage and utilities
			Site plans must be signed and sealed by the appropriate license holder(s). Every plan submitted for a building permit must be signed and sealed by a licensed Connecticut Professional Engineer.
			Per CT General Statute Section 22a-329, for all sites ½ acre or greater, a separate Soil Erosion and Sedimentation Control Plan shall be prepared that meets the requirements of the *2002 Connecticut Soil Erosion and Sediment Control Guidelines.*
			All non-conformances with City of New Britain standards shall be clearly identified in a type-written manner on a sheet accompanying the submittal.

			All revisions proposed on the submittal of an amendment to an approved site plan must be clearly identified, in a manner satisfactory to the City Engineer, on the plan and cross-referenced in a revisions section in the title block of the plan. The default, pre-approved manner of identifying revisions is to enclose each revision in a 'cloud' linestyle and identify with a cross-referenced number or letter. The identifier used is to be sequenced with each subsequent amendment/revision group.
Site Plan Requirements (Planning)			
Y	***N***	***NA***	
			<u>Site Plan Data Chart,</u> which, as a minimum, provides the following information: a. Zoning District(s) b. Existing and Proposed Use(s) and whether such use is permitted by right, special exception or variance* c. Lot Area- minimum required by zoning and actual/ proposed. d. Lot Width- minimum required by zoning and actual/ proposed e. Yard Setbacks: front, side, rear and transitional yard (if any)- minimum required by zoning and actual/ proposed f. Building(s) footprint area and total floor area g. Building coverage percentage and floor area ratio- maximum permitted by zoning and actual/ proposed h. Building height maximum permitted by zoning and actual/ proposed i. Number of dwelling units (residential and mixed use developments only) maximum permitted by zoning and actual/ proposed j. Parking calculation per Section 240-20 and/or 240-30, for all uses of the site, minimum of parking spaces required by zoning and actual/ proposed, including breakdown of standard sized, handicapped and compact spaces (if applicable) **Any item that does not conform to zoning shall include a notation or narrative on the site plan explaining that such item is either legally nonconforming, or permitted or proposed to be permitted by variance. All applicable variances and special exceptions previously obtained for the development shall be specified on the site plan and referenced both by Zoning Board of Appeals application # and date of approval.*
			<u>Landscaping Plan</u> prepared in accordance with good professional standards and including a table of symbols and names identifying the specific plants, the number of each plant, etc.
			<u>Screened Dumpster Location</u> or other suitable provisions for trash handling and recycling.
			<u>Loading and Delivery Locations</u> must be shown for commercial or industrial development, located safely so as to avoid any interference of vehicle or pedestrian traffic and located and /or screened so as to minimize adverse visual effect.

			Fence Locations and proposed fence heights; such heights not in excess of those specified per Section 230-100.1
			Historic Status, if applicable, should be noted on the plan.
Site Plan Requirements (Public Works)			
Y	***N***	***NA***	
			Proposed contours at 1' intervals and spot elevations where needed for clarity.
			Proposed spot elevations shall be given at back of walk/street line at property corners and center of existing/proposed driveway aprons.
			Identify and call out limits of all proposed site improvements. Existing improvements to remain must be clearly identified.
			Proposed improvements must be dimensioned/located sufficiently for proper plan interpretation and to an extent to allow proper construction layout based on the plan [without relying on 'scaling'.]
			Location and types of proposed fencing.
			Location and types of retaining walls. Note that the City requires a licensed Professional Engineer to provide a design for all retaining walls over 4' in [retaining] height.
			Accessible parking and access issues addressed.
			Safe pedestrian access within and adjacent to the site addressed/shown.
			Improve sidewalk along site frontage to City standards.
			Size, location, and type of signs.
			Location, lamp type, intensity, and direction of outdoor lighting.
			Adequate truck access and loading /unloading facilities.
			Impact of noise, odor, lighting, dust, and smoke addressed.
			Adequacy of design to provide safe and convenient interior traffic circulation that provides convenient access to all structures, uses, parking spaces and loading spaces.
			Proper sight distances for vehicles exiting and entering the site.
			Provide pre and post stormwater calculations for a 10-Year Storm event. An assessment of impact of increased stormwater runoff on existing facilities may be required. If existing public facilities cannot accommodate additional runoff, on-site detention may be required.
			New site and stormwater systems shall not negatively impact other properties, and shall utilize water quality BMPs where applicable consistent with the requirements of the CT Department of Environmental Protection's MS4 Permit

			and the 2004 CTDEP's Stormwater Quality Manual.
			Size, type, length, and elevations of all proposed and existing utilities and laterals, both on-site and adjacent to the site. Age of existing utilities being tied into must be identified.
			Soil and erosion control, including both temporary and permanent measures, shall be in accordance with City standards and the "2002 Connecticut Guidelines for Soil Erosion and Sediment Control" manual; and the particular measures shall be appropriately noted, depicted, and detailed on the plans. For larger sites, a separate site E&S control plan sheet is appropriate.
			Construction details for all applicable items (applicant should use City Standards where applicable.)
			For larger developments, an offsite traffic impact study may be required. Developments with major impacts to public offsite road systems may be required to upgrade those facilities.
			Subsurface geotechnical investigation is required for all sites where the proposed building(s) will be 5,000 sf or greater, in areas where there are known to be poor subsurface conditions, or at the discretion of the City Engineer.
Site Plan Requirements (Fire Marshall)			
Y	***N***	***NA***	
			Emergency vehicle access on paved roads, fire lanes, parking lot lanes, or a combination thereof, shall be provided to all structures. The site must accommodate New Britain Fire Department equipment using only forward movements.
			Vehicle turning radius analysis shall be provided for all emergency vehicle access ways. The analysis shall plot, at a minimum, the farthest outside and farthest inside wheel and overhang paths for each turning movement. The specific design vehicle to be used shall be determined by the Fire Marshall's Office. The analysis shall be performed via the Autoturn software application (or equal), or other method approved for and appropriate to a particular application. The method used for making the analysis, the design vehicle, and the design criteria shall be clearly stated on the analysis. This requirement may only be relaxed or waived by the Fire Marshall's office.
			Two locations for site ingress and egress shall be provided.
			Site provides a minimum of 13'-6" of vertical clearance along the entire length of the emergency vehicle access ways.

NEW BRITAIN PUBLIC WORKS
27 WEST MAIN STREET
NEW BRITAIN, CT. 06051
Phone: 860-826-3350
Fax: 860-826-3353
www.new-britain.net